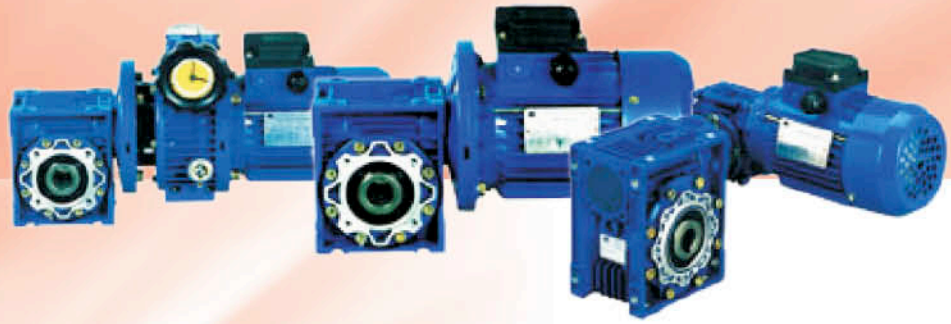

# MOTOREDUCTORES DE VIS SIN FIN
# MOTOVARIADORES DE VELOCIDAD

## *WORM GEARBOXES*
## *SPEED MOTORVARIATORS*

1ª edición
*1st edition*

JALMAC GEAR

cosgra sa

Desde siempre, la preocupación de COSGRA ha sido la de responder a las exigencias de cada cliente con la propuesta de soluciones adaptadas.

El seguimiento total desde la concepción hasta la fabricación garantiza la elección de soluciones optimizadas de gran rendimiento.

La arquitectura modular de nuestros fabricados nos permite, gracias a la producción de grandes series de componentes y módulos estándars, proponer un producto personalizado con plazos de entrega rápidos al mejor precio.

El concepto modular, nuestro último producto introducido para los elementos con reductores planetarios, rodillos motorizados y motoreductores refleja la imagen de nuestra filosofía y nos permite entregar un producto personalizado al cliente en 24/48 horas.

Gracias por el tiempo dedicado a descubrir nuestro "Know How" y hasta pronto.

*From the beginning the first COSGRA concern has always been to answer our customers requeriments in proposing customised solutions.*

*Our policy of total build and quality permits us to choose the most adapted solution and a full optimisation.*

*Our products modular constructions allows COSGRA a continuous production of components and standard parts that guaranties you a personalised product, a quick delivery at a low price.*

*Our last born product the modular concept dealing with planetary gears, motorised drums and gearmotors allows us to supply a customer customised product in 24/48 h.*

*Thank you for the time you are going to spend to discover our Know How and see you soon at COSGRA.*

**NOTA:** *COSGRA* se reserva el derecho y la facultad de modificar en cualquier momento la documentación y los productos sin previo aviso.
**Note:** *COSGRA reserves the right and the authority to modify the documentation and the products at any moment without prior notice.*

# MOTOREDUCTORES DE VIS SIN FIN
# *WORM GEARBOXES*
# MOTOVARIADORES DE VELOCIDAD
# *SPEED MOTORVARIATORS*

## ÍNDICE
## *CONTENTS*


**MSF MOTOREDUCTORES DE VIS SIN FIN / *MSF SERIES WORM GEARED MOTORS***

Breve introducción / *Brief introduction* ..... 4

Designación / *Designation* ..... 4

Instrucciones de montaje y mantenimiento / *Operation & Maintenance* ..... 5

Cargas radiales y axiales / *Radial and Axial loads* ..... 6

Irreversibilidad / *Irreversibility* ..... 6

Despiece / *Spare parts* ..... 7

Disposición de las bridas y de los ejes de salida
*Position diagram for output flange and single shaft* ..... 7

Prestaciones de los motoreductores de vis sin fin
*Performance of worm geared motors* ..... 8

Dimensiones / *Overall dimensions* ..... 11

Accesorios / *Accesories* ..... 15

**PR+MSF MOTOREDUCTORES DE VIS SIN FIN CON PREREDUCCIÓN**
***PR+MSF WORM GEARED MOTORS WITH PRE-STAGE HELICAL UNITS***

Designación / *Designation* ..... 16

PR + MSF Listado de posibles combinaciones / *PR + MSF possible combinations* ..... 16

Prestaciones de los motoreductores de vis sin fin con prereducción
*Performance of worm geared motors with pre-stage helical units* ..... 17

Dimensiones / *Overall dimensions* ..... 19

**MSF/MSF MOTOREDUCTORES DE DOBLE VIS SIN FIN**
***MSF/MSF COMBINED WORM GEARED MOTORS***

Designación / *Designation* ..... 20

Prestaciones de los motoreductores de doble vis sin fin
*Performance of combined worm geared motors* ..... 21

Dimensiones / *Overall dimensions* ..... 22

**MVB MOTOVARIADORES DE DISCOS PLANETARIOS**
***MVB SERIES STEPLESS SPEED MOTOR-VARIATORS***

Breve introducción / *Brief introduction* ..... 23

Características de funcionamiento / *Structure & Principle* ..... 23

Designación / *Designation* ..... 24

Instrucciones de montaje y mantenimiento / *Operation & Maintenance* ..... 24

Prestaciones de motovariadores tipo MVB
*Performance of stepless motor-variators type MVB* ..... 26

Prestaciones de motovariadores – reductores compactos tipo MVB /C
*Performance of motor-variators with gear reducer type MVB /C* ..... 26

Dimensiones / *Overall dimensions* ..... 27

**MVB+MSF MOTO VARIADORES-REDUCTOR VIS SIN FIN**
***MVB+MSF MOTOVARIATOR & WORM GEARBOXES***

Designación / Designation ..... 30

Prestaciones de los motovariadores - reductores de vis sin fin
*Performance of motor-variators with worm gearboxes* ..... 31

Dimensiones / *Overall dimensions* ..... 32

**POSICIONES DE MONTAJE / *MOUNTING POSITIONS*** ..... 34

**LUBRICACIÓN / *LUBRICATION*** ..... 35

**MOTORES ELÉCTRICOS / *ELECTRIC MOTORS*** ..... 36

**GARANTÍAS, DEVOLUCIONES Y RECLAMACIONES**
***WARRANTIES, RETURNS AND COMPLAINTS*** ..... 38

# MSF MOTOREDUCTORES DE VIS SIN FIN
# *MSF SERIES WORM GEARED MOTORS*

## BREVE INTRODUCCIÓN / *BRIEF INTRODUCTION*

Los reductores de vis sin fin de la serie **SF – MSF** son una nueva generación de productos desarrollados por nuestra compañía sobre la base de un compromiso de satisfacción a las exigencias de nuestros clientes, se caracterizan por un cinematismo compuesto por un vis de acero cementado y rectificado y una corona fabricada con una aleación de bronce sobre un núcleo de hierro fundido esferoidal.

La serie está compuesta por 9 tamaños con relaciones de reducción entre 1:7.5 hasta 1:100, se fabrican con carcasa de aluminio hasta el modelo 90 y en fundición gris las carcasas de los modelos 110 y 130.

Complementan la gama 3 tamaños de pre-reducciones de un tren de engranajes helicoidales **PR**, motoreductores combinados con doble reductor, ejes de salida simples, dobles y brazos de reacción.

*Worm gear speed reducers type **SF – MSF** range is a brand new product generation of products developed by our company. They are characterized by a kinematic motion made of a casehardened and tempered steel worm with a ground thread and a wheel made out of a spheroidal graphite cast iron hub with addition of bronze.*

*The SF – MSF series are made up for 9 sizes with ratios from 1:7.5 until 1:100, are manufactured in die-cast aluminium frame up to the model 90 and in grey cast iron sizes 110 and 130.*

*As an extension range we have avaliable 3 sizes of pre-stage helical units **PR**, combination of double worm gearmotors, single and double output shafts and torque arms.*



## DESIGNACIÓN / *DESIGNATION*

**MSF 063 FA - 30 DV ES Ø25 PAM80B14 B3**

Posición de montaje.
*Mounting position.*

Predisposición de acoplamiento a motor.
*Motor coupling.*

ø Arbol de salida hueco (sólo 040-050-063-075-090).
*ø Output shaft bore (only for 040-050-063-075-090).*

**ES** = Eje de salida simple. *Single output shaft.*
**ED** = Eje de salida doble. *Double output shaft.*
**BR** = Brazo de reacción. *Torque arm.*

**DV** = Vis prolongado. *Double input shaft.*

Relación de reducción. *Reduction ratio.*

**FA**
**FB**
**FC**
**FD**
**FE**

Versiones brida de salida. *Output flange versions.*

Tamaño. *Size* **025 - 030 - 040 - 050 - 063 - 075 - 090 - 110 - 130.**

**MSF** Motoreductor de vis sin fin. *Worm geared motor.*
**SF** Reductor de vis sin fin con eje de entrada. *Worm gearbox with input shaft.*

# MSF MOTOREDUCTORES DE VIS SIN FIN
# *MSF SERIES WORM GEARED MOTORS*

## INSTRUCCIONES DE MONTAJE Y MANTENIMIENTO
## *OPERATION AND MAINTENANCE*

Durante la instalación deben respetarse las siguientes instrucciones:

- Asegurar una alineación correcta entre motor y reductor y entre el reductor y la máquina.
- Instalar el reductor de manera que no sufra vibraciones.
- Observar que los órganos a instalar sobre los ejes cumplan las tolerancias correctas sin correr el riesgo de dañar los rodamientos o las partes externas del reductor.
- Si se preveen sobrecargas, golpes o bloqueos durante el funcionamiento hay que preveer la instalación de acoplamientos de seguridad.
- Si se aplican pinturas sobre el reductor se debe proteger el borde exterior de los retenes para evitar que el caucho se deteriore y cause perdidas de lubricante.
- Pulir completamente la superficie donde se debe fijar el reductor y tratar con sustancias protectoras las partes metálicas en contacto antes del montaje para evitar oxidaciones y bloqueos.
- Verificar en el momento de la puesta en funcionamiento que las partes eléctricas llevan las protecciones necesarias.
- Verificar que la tensión de alimentación indicada en las placas de los motores sea la correcta.

Durante el funcionamiento:

- Los reductores suministrados sin tapones están lubricados con engrases sintéticos por lo que no requieren ningún tipo de mantenimiento.
- El cambio de aceite para los modelos 110 y 130, que se suministran con aceite mineral, debe realizarse después de 5.000 horas de funcionamiento o después de largos periodos de inactividad. Es necesario verificar la cantidad de aceite necesaria en función de las posiciones de montaje indicadas en las tablas (pág. 34).
- En caso de temperaturas ambiente inferiores a –20°C o superiores a 40°C rogamos ponerse encontacto con nuestro departamento técnico.
- Durante la fase de rodaje la temperatura del reductor puede ser un poco más elevada de lo normal.

*To install the reduction unit the following instructions must be complied:*

- *Ensure correct alignment between the motor and the gear unit and between the gear unit and the driven machine.*
- *Mount the gear unit so that it is not subject to vibrations while operating.*
- *Machine the parts which are keyed into the shafts with the correct tolerance, to avoid forcing the gear unit during mounting.*
- *If shock, impact or seizure are expected, safety couplings must be fitted.*
- *If additional paint is applied you must protect the outer edges of the oil seals to prevent the rubber from drying and causing oil leaks.*
- *Clean the mating surfaces thoroughly and coat with suitable protective substances before assembly to prevent oxidation leading to seizing.*
- *When starting up, check that the electrics are equipped with overload cut-out to prevent damage to the motor.*
- *Check that the supply voltage punched on the electric motor nameplate is the same as the main voltage.*

*While the gear unit is working:*

- *For units supplied without oil plugs, lubrication is permanent so they need no servicing.*
- *The oil needs to be changed for 110 and 130 models after approximately 5.000 hours or after long inactivity period. It is necessary to check the quantity of oil needed following the mounting position tables (on page 34).*
- *In the case of ambient temperatures under –20°C or over 40°C please contact with our technical department.*
- *During the early stages of service the gear unit temperature could be lightly higher than usual.*

# MSF MOTOREDUCTORES DE VIS SIN FIN
# *MSF SERIES WORM GEARED MOTORS*

## CARGAS RADIALES Y AXIALES / *RADIAL AND AXIAL LOADS*

Cuando la transmisión del movimiento pueda provocar cargas radiales o axiales en el extremo de los ejes, se debe verificar que éstas nunca superen en las condiciones más desfavorables a los máximos permitidos.

En la siguiente tabla se indican los valores de las cargas radiales admisibles para los ejes de entrada **Fr1**. La carga axial se obtiene: **Fa1=0.2 x Fr1**

*Transmission movement can produce radial or axial loads on shaft ends, it is necessary to make sure that resulting values, in most unfavourable conditions, do not exceed the maximum allowed values.*

*In following table permissible radial loads **Fr1** for input shaft are listed. Contemporary permissible axial load is obtained:*

***Fa1=0.2 x Fr1***

| nv rpm | Fr1 (daN) SF | | | | | | | |
|---|---|---|---|---|---|---|---|---|
| | 030 | 040 | 050 | 063 | 075 | 090 | 110 | 130 |
| 1400 | 6 | 22 | 32 | 42 | 50 | 70 | 100 | 160 |
| 900 | 6 | 25 | 35 | 46 | 53 | 80 | 120 | 180 |
| 700 | 7 | 28 | 40 | 50 | 57 | 90 | 130 | 200 |
| 500 | 7 | 31 | 45 | 53 | 60 | 100 | 145 | 220 |

En la siguiente tabla se indican los valores de las cargas radiales admisibles en el eje de salida **Fr2**. La carga axial admisible se obtiene: **Fa2=0.2 x Fr2**

*Admissible radial loads **Fr2** for output shaft are listed In the next table. Contemporary permissible axial load is obtained:*

***Fa2=0.2 x Fr2***

| nl rpm | Fr2 (daN) SF - MSF | | | | | | | |
|---|---|---|---|---|---|---|---|---|
| | 030 | 040 | 050 | 063 | 075 | 090 | 110 | 130 |
| 187 | 65 | 128 | 177 | 233 | 275 | 305 | 386 | 506 |
| 140 | 73 | 141 | 195 | 256 | 301 | 336 | 424 | 556 |
| 93 | 84 | 162 | 224 | 295 | 346 | 384 | 486 | 638 |
| 70 | 91 | 178 | 247 | 325 | 383 | 424 | 536 | 702 |
| 56 | 100 | 194 | 266 | 349 | 414 | 456 | 577 | 756 |
| 47 | 105 | 205 | 284 | 370 | 439 | 486 | 614 | 804 |
| 35 | 115 | 225 | 313 | 408 | 484 | 534 | 677 | 885 |
| 28 | 125 | 244 | 336 | 441 | 520 | 576 | 729 | 954 |
| 23 | 134 | 259 | 357 | 467 | 554 | 612 | 774 | 1015 |
| 17 | 146 | 286 | 394 | 515 | 610 | 674 | 853 | 1117 |
| 14 | | 308 | 425 | 555 | 656 | 727 | 920 | 1202 |

* Los valores indicados se refieren a las cargas situadas en el centro de los ejes. / ** Values given in the tables are relating at loads in the shafts center line.*

## IRREVERSIBILIDAD / *IRREVERSIBILITY*

Una de las características de algunos reductores de vis sin fin es la irreversibilidad, es decir que no pueden ser accionados desde el eje de salida. A modo orientativo se muestra la siguiente tabla.

*Irreversibility is a characteristic of some worm gear reducers, it can not be operated from the output shaft. As orientation we show you the following table.*

| | 7.5/1 | 10/1 | 15/1 | 20/1 | 25/1 | 30/1 | 40/1 | 50/1 | 60/1 | 80/1 | 100/1 |
|---|---|---|---|---|---|---|---|---|---|---|---|
| 030 | REVERSIBLES | | | NEUTROS | | IRREVERSIBLES | | | | | |
| 040 | | | | | | | | | | | |
| 050 | | | | | | | | | | | |
| 063 | | | | | | | | | | | |
| 075 | | | | | | | | | | | |
| 090 | *REVERSIBLES* | | | | *NEUTRAL* | | | *IRREVERSIBLES* | | | |
| 110 | | | | | | | | | | | |
| 130 | | | | | | | | | | | |

# MSF MOTOREDUCTORES DE VIS SIN FIN
# *MSF SERIES WORM GEARED MOTORS*

## DESPIECE / *SPARE PARTS*

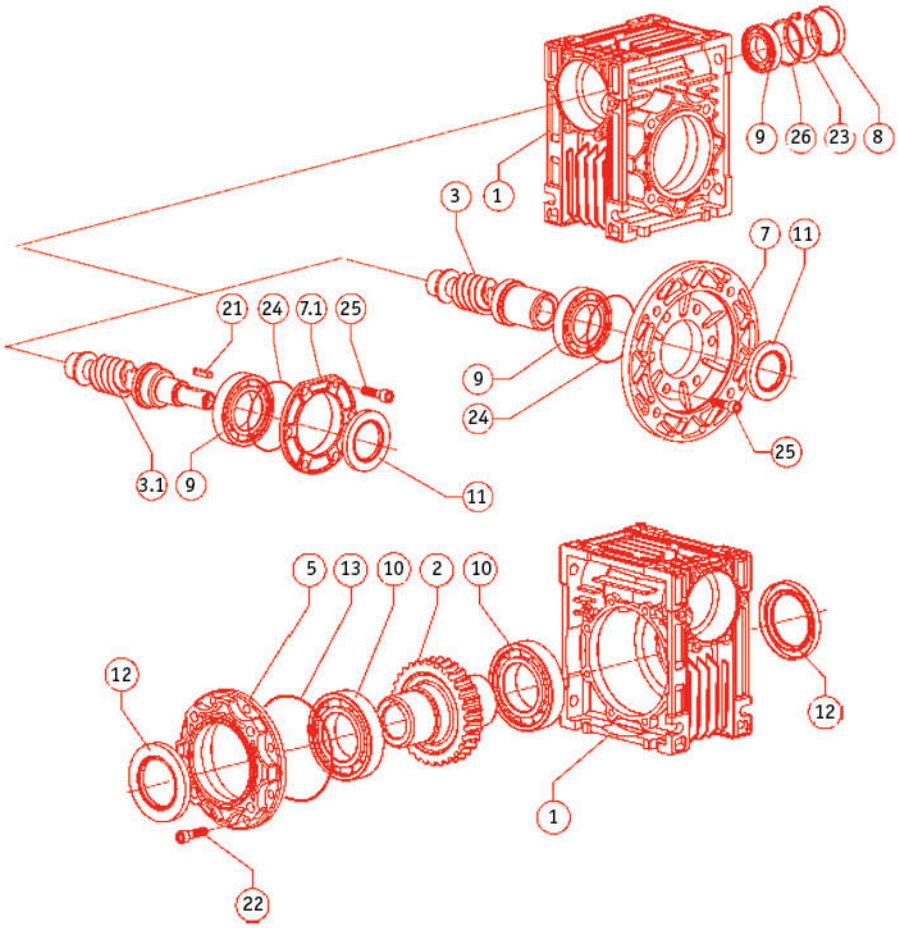


| Nº | PIEZA / *PART* |
|---|---|
| 1 | Carcasa / *Frame* |
| 2 | Corona / *Wheel* |
| 3 | Vis MSF / *Worm MSF* |
| 3.1 | Vis SF / *Worm SF* |
| 5 | Tapa cierre *Output shaft cover* |
| 7 | Brida PAM *Flange PAM* |
| 7.1 | Tapa SF *Input cover SF* |
| 8 | Retén ciego *Seal cover* |
| 9 | Rodamiento *Bearing* |
| 10 | Rodamiento *Bearing* |
| 11 | Retén DIN 3760 *Oil seal DIN 3760* |
| 12 | Retén DIN 3760 *Oil seal DIN 3760* |
| 13 | O-Ring |
| 21 | Chaveta DIN 88885 *Key DIN 8885* |
| 22 | Tornillo DIN 912 *Screw DIN 912* |
| 23 | Seeger DIN 472 *Snap ring DIN 472* |
| 24 | O-Ring |
| 25 | Tornillo DIN 912 *Screw DIn 912* |
| 26 | Aro DIN 888 *Ring DIn 888* |

## DISPOSICIÓN DE LAS BRIDAS Y DE LOS EJES DE SALIDA
## *POSITION DIAGRAM FOR OUTPUT FLANGE AND SINGLE SHAFT*

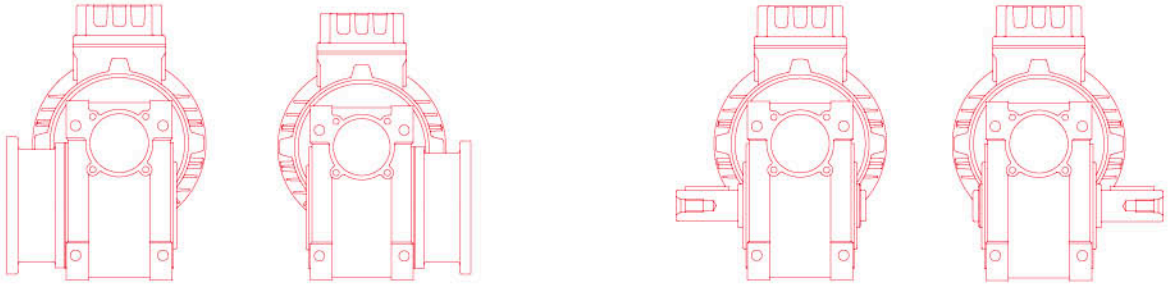

ESTANDARD *STANDARD*

LADO CONTRARIO *OPPOSITE SIDE*

ESTANDARD *STANDARD*

LADO CONTRARIO *OPPOSITE SIDE*

# Prestaciones de los motoreductores de vis sin fin
## *Worm geared motors performances*

| Motor Kw | | n2 rpm | i | M2 Nm | f.s | Tipo *Type* |
|---|---|---|---|---|---|---|
| 0.06 | 4P n1=1400 | 186 | 7.5 | 2.6 | 4.2 | MSF 025 |
| | | 140 | 10 | 3.4 | 3.5 | |
| | | 94 | 15 | 4.9 | 2.5 | |
| | | 70 | 20 | 6.1 | 2.0 | |
| | | 47 | 30 | 8.2 | 1.6 | |
| | | 35 | 40 | 10.2 | 1.3 | |
| | | 28 | 50 | 11.3 | 0.9 | |
| | | 24 | 60 | 11 | 0.7 | |
| | | 24 | 60 | 12.5 | 1.3 | MSF 030 |
| | | 18 | 80 | 13.5 | 0.9 | |
| 0.09 | 2P n1=2800 | 374 | 7.5 | 2.0 | 3.9 | MSF 025 |
| | | 280 | 10 | 2.6 | 3.4 | |
| | | 186 | 15 | 3.8 | 2.4 | |
| | 4P n1=1400 | 186 | 7.5 | 3.9 | 2.8 | MSF 025 |
| | | 140 | 10 | 5.1 | 2.4 | |
| | | 94 | 15 | 7.3 | 1.6 | |
| | | 70 | 20 | 9.2 | 1.3 | |
| | | 47 | 30 | 12.3 | 1.1 | |
| | | 35 | 40 | 13 | 0.9 | |
| | | 186 | 7.5 | 3.9 | 4.6 | MSF 030 |
| | | 140 | 10 | 5.0 | 3.6 | |
| | | 94 | 15 | 7.1 | 2.5 | |
| | | 70 | 20 | 9.0 | 2.0 | |
| | | 56 | 25 | 10.4 | 2.8 | |
| | | 47 | 30 | 12 | 1.1 | |
| | | 35 | 40 | 14.5 | 1.2 | |
| | | 28 | 50 | 16.9 | 1.0 | |
| | | 24 | 60 | 16.9 | 0.9 | |
| | | 28 | 50 | 19 | 2.0 | MSF 040 |
| | | 24 | 60 | 21.4 | 1.7 | |
| | | 18 | 80 | 25.5 | 1.3 | |
| | | 14 | 100 | 28.9 | 1.0 | |
| | 6P n1=900 | 120 | 7.5 | 5.9 | 3.4 | MSF 030 |
| | | 11 | 80 | 37 | 1.0 | MSF 040 |
| | | 9 | 100 | 41 | 0.8 | |
| | | 11 | 80 | 37 | 1.8 | MSF 050 |
| | | 9 | 100 | 42 | 1.3 | |
| 0.12 | 2P n1=2800 | 373 | 7.5 | 2.7 | 3.0 | MSF 025 |
| | | 280 | 10 | 3.5 | 2.6 | |
| | | 186 | 15 | 5.0 | 1.8 | |
| | 4P n1=1400 | 186 | 7.5 | 5.2 | 3.4 | MSF 030 |
| | | 140 | 10 | 6.7 | 2.7 | |
| | | 94 | 15 | 9.5 | 1.9 | |
| | | 70 | 20 | 12 | 1.5 | |
| | | 56 | 25 | 13.9 | 1.5 | |
| | | 47 | 30 | 16 | 1.3 | |
| | | 35 | 40 | 17 | 0.9 | |
| | | 47 | 30 | 17.2 | 2.6 | MSF 040 |
| | | 35 | 40 | 21.3 | 1.9 | |
| | | 28 | 50 | 25.4 | 1.5 | |
| | | 24 | 60 | 28.5 | 1.3 | |
| | | 18 | 80 | 34.1 | 1.0 | |
| | | 14 | 100 | 38 | 0.8 | |
| | | 24 | 60 | 29 | 2.3 | MSF 050 |
| | | 18 | 80 | 34.7 | 1.9 | |
| | | 14 | 100 | 40.1 | 1.4 | |
| | 6P n1=900 | 120 | 7.5 | 7.9 | 2.5 | MSF 030 |
| | | 60 | 15 | 14 | 1.4 | |
| | | 15 | 60 | 42 | 1.7 | MSF 050 |
| | | 11 | 80 | 50 | 1.4 | |
| | | 9 | 100 | 56 | 1.0 | |

| Motor Kw | | n2 rpm | i | M2 Nm | f.s | Tipo *Type* |
|---|---|---|---|---|---|---|
| 0.18 | 2P n1=2800 | 374 | 7.5 | 4.0 | 3.2 | MSF 030 |
| | | 280 | 10 | 5.2 | 2.5 | |
| | | 186 | 15 | 7.5 | 1.7 | |
| | 4P n1=1400 | 186 | 7.5 | 8.0 | 2.3 | MSF 030 |
| | | 140 | 10 | 10 | 1.8 | |
| | | 94 | 15 | 14 | 1.3 | |
| | | 70 | 20 | 18 | 1.0 | |
| | | 56 | 25 | 20 | 1.0 | |
| | | 70 | 20 | 19 | 2.0 | MSF 040 |
| | | 56 | 25 | 23 | 1.7 | |
| | | 47 | 30 | 26 | 1.7 | |
| | | 35 | 40 | 32 | 1.3 | |
| | | 28 | 50 | 38 | 1.0 | |
| | | 24 | 60 | 43 | 0.8 | |
| | | 35 | 40 | 32 | 2.3 | MSF 050 |
| | | 28 | 50 | 38 | 1.9 | |
| | | 24 | 60 | 43 | 1.6 | |
| | | 18 | 80 | 53 | 1.2 | |
| | | 14 | 100 | 55 | 0.9 | |
| | 6P n1=900 | 18 | 50 | 56 | 1.4 | MSF 050 |
| | | 15 | 60 | 63 | 1.1 | |
| | | 11 | 80 | 75 | 0.9 | |
| | | 11 | 80 | 79 | 1.6 | MSF 063 |
| | | 9 | 100 | 90 | 1.4 | |
| 0.25 | 2P n1=2800 | 374 | 7.5 | 5.6 | 2.3 | MSF 030 |
| | | 280 | 10 | 7.2 | 1.8 | |
| | | 186 | 15 | 10 | 1.3 | |
| | 4P n1=1400 | 186 | 7.5 | 11 | 3.6 | MSF 040 |
| | | 140 | 10 | 14 | 2.8 | |
| | | 94 | 15 | 20 | 1.9 | |
| | | 70 | 20 | 26 | 1.5 | |
| | | 56 | 25 | 31 | 1.2 | |
| | | 47 | 30 | 36 | 1.3 | |
| | | 35 | 40 | 44 | 0.9 | |
| | | 70 | 20 | 26 | 2.7 | MSF 050 |
| | | 56 | 25 | 32 | 2.2 | |
| | | 47 | 30 | 36 | 2.3 | |
| | | 35 | 40 | 45 | 1.7 | |
| | | 28 | 50 | 53 | 1.4 | |
| | | 24 | 60 | 60 | 1.1 | |
| | | 18 | 80 | 65 | 0.9 | |
| | | 24 | 60 | 63 | 2.0 | MSF 063 |
| | | 18 | 80 | 77 | 1.6 | |
| | | 14 | 100 | 85 | 1.4 | |
| | 6P n1=900 | 120 | 7.5 | 17 | 2.6 | MSF 040 |
| | | 15 | 60 | 92 | 1.5 | MSF 063 |
| | | 11 | 80 | 110 | 1.2 | |
| | | 9 | 100 | 125 | 1.0 | |
| 0.37 | 2P n1=2800 | 373 | 7.5 | 8.4 | 3.3 | MSF 040 |
| | | 280 | 10 | 11 | 2.6 | |
| | | 186 | 15 | 16 | 1.9 | |
| | 4P n1=1400 | 186 | 7.5 | 16 | 2.4 | MSF 040 |
| | | 140 | 10 | 21 | 1.9 | |
| | | 94 | 15 | 30 | 1.3 | |
| | | 70 | 20 | 39 | 1.0 | |
| | | 56 | 25 | 47 | 0.8 | |
| | | 94 | 15 | 31 | 2.4 | MSF 050 |
| | | 70 | 20 | 39 | 1.8 | |
| | | 56 | 25 | 47 | 1.5 | |
| | | 47 | 30 | 54 | 1.5 | |
| | | 35 | 40 | 66 | 1.1 | |

# Prestaciones de los motoreductores de vis sin fin
## *Worm geared motors performances*

| Motor Kw | | n2 rpm | i | M2 Nm | f.s | Tipo *Type* |
|---|---|---|---|---|---|---|
| 0.37 | 4P n1=1400 | 28 | 50 | 73 | 0.9 | MSF 050 |
| | | 24 | 60 | 89 | 0.8 | |
| | | 35 | 40 | 70 | 2.1 | MSF 063 |
| | | 28 | 50 | 83 | 1.6 | |
| | | 24 | 60 | 95 | 1.4 | |
| | | 18 | 80 | 114 | 1.1 | |
| | | 14 | 100 | 118 | 0.9 | |
| | | 24 | 60 | 98 | 2.0 | MSF 075 |
| | | 18 | 80 | 121 | 1.6 | |
| | | 14 | 100 | 139 | 1.3 | |
| | 6P n1=900 | 120 | 7.5 | 25 | 3.3 | MSF 050 |
| | | 15 | 60 | 137 | 1.0 | MSF 063 |
| | | 15 | 60 | 144 | 1.5 | MSF 075 |
| | | 11 | 80 | 173 | 1.2 | |
| | | 9 | 100 | 196 | 1.0 | |
| 0.55 | 2P n1=2800 | 374 | 7.5 | 13 | 2.2 | MSF 040 |
| | | 280 | 10 | 17 | 1.8 | |
| | | 186 | 15 | 24 | 1.5 | |
| | 4P n1=1400 | 186 | 7.5 | 25 | 2.9 | MSF 050 |
| | | 140 | 10 | 32 | 2.2 | |
| | | 94 | 15 | 46 | 1.6 | |
| | | 70 | 20 | 60 | 1.2 | |
| | | 56 | 25 | 71 | 1.0 | |
| | | 47 | 30 | 81 | 1.0 | |
| | | 70 | 20 | 60 | 2.2 | MSF 063 |
| | | 56 | 25 | 72 | 1.8 | |
| | | 47 | 30 | 80 | 1.9 | |
| | | 35 | 40 | 104 | 1.4 | |
| | | 28 | 50 | 123 | 1.1 | |
| | | 24 | 60 | 140 | 0.9 | |
| | | 35 | 40 | 108 | 2.0 | MSF 075 |
| | | 28 | 50 | 129 | 1.6 | |
| | | 24 | 60 | 146 | 1.4 | |
| | | 18 | 80 | 180 | 1.1 | |
| | | 14 | 100 | 206 | 0.9 | |
| | | 18 | 80 | 189 | 1.5 | MSF 090 |
| | | 14 | 100 | 221 | 1.2 | |
| | | 18 | 80 | 201 | 2.4 | MSF 110 |
| | | 14 | 100 | 236 | 1.9 | |
| | 6P n1=900 | 120 | 7.5 | 38 | 2.2 | MSF 050 |
| | | 18 | 50 | 187 | 1.2 | MSF 075 |
| | | 15 | 60 | 214 | 1.0 | |
| | | 15 | 60 | 224 | 1.6 | MSF 090 |
| | | 11 | 80 | 275 | 1.1 | |
| | | 9 | 100 | 315 | 0.9 | |
| | | 11 | 80 | 294 | 1.8 | MSF 110 |
| | | 9 | 100 | 338 | 1.4 | |
| 0.75 | 2P n1=2800 | 373 | 7.5 | 17 | 3.0 | MSF 050 |
| | | 280 | 10 | 23 | 2.4 | |
| | | 186 | 15 | 33 | 1.7 | |
| | 4P n1=1400 | 186 | 7.5 | 34 | 2.1 | MSF 050 |
| | | 140 | 10 | 44 | 1.6 | |
| | | 94 | 15 | 63 | 1.2 | |
| | | 70 | 20 | 81 | 0.9 | |
| | | 94 | 15 | 63 | 2.2 | MSF 063 |
| | | 70 | 20 | 82 | 1.6 | |
| | | 56 | 25 | 99 | 1.3 | |
| | | 47 | 30 | 109 | 1.4 | |
| | | 35 | 40 | 143 | 1.0 | |
| | | 47 | 30 | 116 | 2.0 | MSF 075 |
| | | 35 | 40 | 147 | 1.4 | |
| | | 28 | 50 | 176 | 1.2 | |
| | | 24 | 60 | 200 | 1.0 | |

| Motor Kw | | n2 rpm | i | M2 Nm | f.s | Tipo *Type* |
|---|---|---|---|---|---|---|
| 0.75 | 4P n1=1400 | 28 | 50 | 184 | 1.8 | MSF 090 |
| | | 24 | 60 | 212 | 1.5 | |
| | | 18 | 80 | 257 | 1.1 | |
| | | 14 | 100 | 270 | 0.9 | |
| | | 18 | 80 | 274 | 1.8 | MSF110 |
| | | 14 | 100 | 322 | 1.4 | |
| | 6P n1=900 | 120 | 7.5 | 52 | 2.9 | MSF 063 |
| | | 18 | 50 | 271 | 1.4 | MSF 090 |
| | | 15 | 60 | 306 | 1.1 | |
| | | 15 | 60 | 325 | 1.9 | MSF 110 |
| | | 11 | 80 | 401 | 1.3 | |
| | | 9 | 100 | 462 | 1.1 | |
| 1.10 | 2P n1=2800 | 374 | 7.5 | 25 | 2.1 | MSF 050 |
| | | 280 | 10 | 33 | 1.6 | |
| | | 186 | 15 | 48 | 1.2 | |
| | 4P n1=1400 | 186 | 7.5 | 49 | 2.6 | MSF 063 |
| | | 140 | 10 | 65 | 2.0 | |
| | | 94 | 15 | 93 | 1.5 | |
| | | 70 | 20 | 121 | 1.1 | |
| | | 56 | 25 | 149 | 0.9 | |
| | | 47 | 30 | 167 | 1.0 | |
| | | 70 | 20 | 122 | 1.7 | MSF 075 |
| | | 56 | 25 | 149 | 1.3 | |
| | | 47 | 30 | 170 | 1.3 | |
| | | 35 | 40 | 216 | 1.0 | |
| | | 35 | 40 | 225 | 1.6 | MSF 090 |
| | | 28 | 50 | 271 | 1.3 | |
| | | 24 | 60 | 311 | 1.0 | |
| | | 24 | 60 | 324 | 1.7 | MSF 110 |
| | | 18 | 80 | 410 | 1.2 | |
| | | 14 | 100 | 460 | 1.0 | |
| | | 18 | 80 | 408 | 2.1 | MSF 130 |
| | | 14 | 100 | 480 | 1.5 | |
| | 6P n1=900 | 120 | 7.5 | 76 | 2.0 | MSF 063 |
| | | 18 | 50 | 414 | 1.6 | MSF 110 |
| | | 15 | 60 | 476 | 1.3 | |
| | | 11 | 80 | 588 | 0.9 | |
| | | 11 | 80 | 598 | 1.4 | MSF 130 |
| | | 9 | 100 | 689 | 1.1 | |
| 1.50 | 2P n1=2800 | 374 | 7.5 | 35 | 2.7 | MSF 063 |
| | | 280 | 10 | 46 | 2.1 | |
| | | 186 | 15 | 66 | 1.6 | |
| | 4P n1=1400 | 186 | 7.5 | 68 | 1.9 | |
| | | 140 | 10 | 89 | 1.5 | |
| | | 94 | 15 | 127 | 1.1 | |
| | | 70 | 20 | 166 | 0.8 | |
| | | 140 | 10 | 90 | 2.2 | MSF 075 |
| | | 94 | 15 | 130 | 1.5 | |
| | | 70 | 20 | 167 | 1.3 | |
| | | 56 | 25 | 200 | 1.0 | |
| | | 47 | 30 | 230 | 1.0 | |
| | | 56 | 25 | 209 | 1.6 | MSF 090 |
| | | 47 | 30 | 236 | 1.7 | |
| | | 35 | 40 | 306 | 1.2 | |
| | | 28 | 50 | 369 | 0.9 | |
| | | 24 | 60 | 424 | 0.8 | |
| | | 28 | 50 | 375 | 1.6 | MSF 110 |
| | | 24 | 60 | 442 | 1.3 | |
| | | 18 | 80 | 490 | 0.9 | |
| | | 24 | 60 | 450 | 1.9 | MSF 130 |
| | | 18 | 80 | 547 | 1.5 | |
| | | 14 | 100 | 652 | 1.1 | |



JAUMAC | cosgra sa

# Prestaciones de los motoreductores de vis sin fin
## *Worm geared motors performances*

| Motor Kw | | n2 rpm | i | M2 Nm | f.s | Tipo *Type* |
|---|---|---|---|---|---|---|
| 1.50 | 6P n1=900 | 120 | 7.5 | 105 | 2.0 | MSF 075 |
| | | 15 | 60 | 649 | 1.0 | MSF 110 |
| | | 15 | 60 | 659 | 1.4 | MSF 130 |
| | | 11 | 80 | 815 | 1.1 | |
| 2.20 | 2P n1=2800 | 374 | 7.5 | 51 | 1.8 | MSF 063 |
| | | 280 | 10 | 67 | 1.5 | |
| | | 186 | 15 | 97 | 1.1 | |
| | 4P n1=1400 | 186 | 7.5 | 100 | 1.8 | MSF 075 |
| | | 140 | 10 | 132 | 1.5 | |
| | | 94 | 15 | 191 | 1.0 | |
| | | 186 | 7.5 | 101 | 2.9 | MSF 090 |
| | | 140 | 10 | 133 | 2.3 | |
| | | 94 | 15 | 193 | 1.9 | |
| | | 70 | 20 | 251 | 1.4 | |
| | | 56 | 25 | 307 | 1.1 | |
| | | 47 | 30 | 346 | 1.2 | |
| | | 70 | 20 | 256 | 2.2 | MSF 110 |
| | | 56 | 25 | 316 | 1.9 | |
| | | 47 | 30 | 355 | 1.8 | |
| | | 35 | 40 | 462 | 1.3 | |
| | | 28 | 50 | 550 | 1.1 | |
| | | 24 | 60 | 648 | 0.9 | |
| | | 28 | 50 | 567 | 1.7 | MSF 130 |
| | | 24 | 60 | 660 | 1.4 | |
| | | 18 | 80 | 803 | 1.0 | |
| | 6P n1=900 | 120 | 7.5 | 156 | 2.2 | MSF 075 |
| | | 18 | 50 | 840 | 1.2 | MSF 130 |
| | | 15 | 60 | 966 | 1.0 | |
| 3.00 | 2P n1=2800 | 373 | 7.5 | 70 | 1.9 | MSF 075 |
| | | 280 | 10 | 92 | 1.6 | |
| | | 374 | 7.5 | 71 | 3.0 | MSF 090 |
| | | 280 | 10 | 92 | 2.6 | |
| | 4P n1=1400 | 186 | 7.5 | 138 | 2.1 | MSF 090 |
| | | 140 | 10 | 187 | 1.7 | |
| | | 94 | 15 | 264 | 1.4 | |
| | | 70 | 20 | 344 | 1.0 | |
| | | 140 | 10 | 182 | 2.6 | MSF 110 |
| | | 94 | 15 | 263 | 2.2 | |
| | | 70 | 20 | 350 | 1.6 | |
| | | 56 | 25 | 431 | 1.4 | |
| | | 47 | 30 | 484 | 1.3 | |
| | | 35 | 40 | 462 | 1.0 | |
| | | 28 | 50 | 767 | 0.8 | |
| | | 35 | 40 | 631 | 1.6 | MSF 130 |
| | | 28 | 50 | 773 | 1.3 | |
| | | 24 | 60 | 884 | 1.0 | |
| | | 18 | 80 | 1113 | 0.8 | |
| | 6P n1=900 | 120 | 7.5 | 212 | 2.7 | MSF 110 |
| | | 30 | 30 | 745 | 1.6 | MSF 130 |
| | | 22 | 40 | 955 | 1.2 | |

| Motor Kw | | n2 rpm | i | M2 Nm | f.s | Tipo *Type* |
|---|---|---|---|---|---|---|
| 4.00 | 2P n1=2800 | 374 | 7.5 | 93 | 1.4 | MSF 075 |
| | | 280 | 10 | 123 | 1.2 | |
| | | 374 | 7.5 | 94 | 2.2 | MSF 090 |
| | | 280 | 10 | 123 | 1.9 | |
| | 4P n1=1400 | 186 | 7.5 | 182 | 1.0 | MSF 075 |
| | | 140 | 10 | 240 | 0.8 | |
| | | 186 | 7.5 | 184 | 1.6 | MSF 090 |
| | | 140 | 10 | 243 | 1.3 | |
| | | 94 | 15 | 352 | 1.0 | |
| | | 70 | 20 | 458 | 0.8 | |
| | | 186 | 7.5 | 184 | 2.4 | MSF 110 |
| | | 140 | 10 | 243 | 2.1 | |
| | | 94 | 15 | 352 | 1.6 | |
| | | 70 | 20 | 464 | 1.2 | |
| | | 56 | 25 | 573 | 1.0 | |
| | | 47 | 30 | 646 | 1.0 | |
| | | 56 | 25 | 572 | 1.6 | MSF 130 |
| | | 47 | 30 | 655 | 1.6 | |
| | | 35 | 40 | 857 | 1.2 | |
| | | 28 | 50 | 1023 | 1.0 | |
| | | 24 | 60 | 1179 | 0.8 | |
| | 6P n1=900 | 120 | 7.5 | 283 | 2.0 | MSF 110 |
| | | 45 | 20 | 713 | 1.5 | MSF 130 |
| | | 36 | 25 | 870 | 1.2 | |
| 5.50 | 4P n1=1400 | 186 | 7.5 | 253 | 1.9 | MSF 110 |
| | | 140 | 10 | 334 | 1.6 | |
| | | 94 | 15 | 484 | 1.2 | |
| | | 70 | 20 | 638 | 0.9 | |
| | | 186 | 7.5 | 256 | 3.0 | MSF 130 |
| | | 140 | 10 | 334 | 2.5 | |
| | | 94 | 15 | 490 | 1.9 | |
| | | 70 | 20 | 645 | 1.4 | |
| | | 56 | 25 | 788 | 1.2 | |
| | | 47 | 30 | 900 | 1.2 | |
| | | 35 | 40 | 1171 | 0.9 | |
| 7.50 | 4P n1=1400 | 186 | 7.5 | 345 | 1.4 | MSF 110 |
| | | 140 | 10 | 455 | 1.1 | |
| | | 94 | 15 | 660 | 0.9 | |
| | | 186 | 7.5 | 349 | 2.1 | MSF 130 |
| | | 140 | 10 | 455 | 1.8 | |
| | | 94 | 15 | 667 | 1.4 | |
| | | 70 | 20 | 880 | 1.0 | |
| | | 56 | 25 | 1074 | 0.9 | |
| | | 47 | 30 | 1228 | 0.8 | |
| | | 35 | 40 | 1596 | 0.7 | |
| 9.20 | 4P n1=1400 | 186 | 7.5 | 428 | 1.8 | MSF 130 |
| | | 140 | 10 | 559 | 1.5 | |
| | | 94 | 15 | 819 | 1.1 | |
| | | 70 | 20 | 1079 | 0.8 | |
| | | 56 | 25 | 1318 | 0.7 | |

# MSF MOTOREDUCTORES DE VIS SIN FIN
# *MSF SERIES WORM GEARED MOTORS*

## DIMENSIONS / *OVERALL DIMENSIONS*

### MSF 025

Peso sin motor 0.7Kg.
*Weight without motor 0.7Kg.*

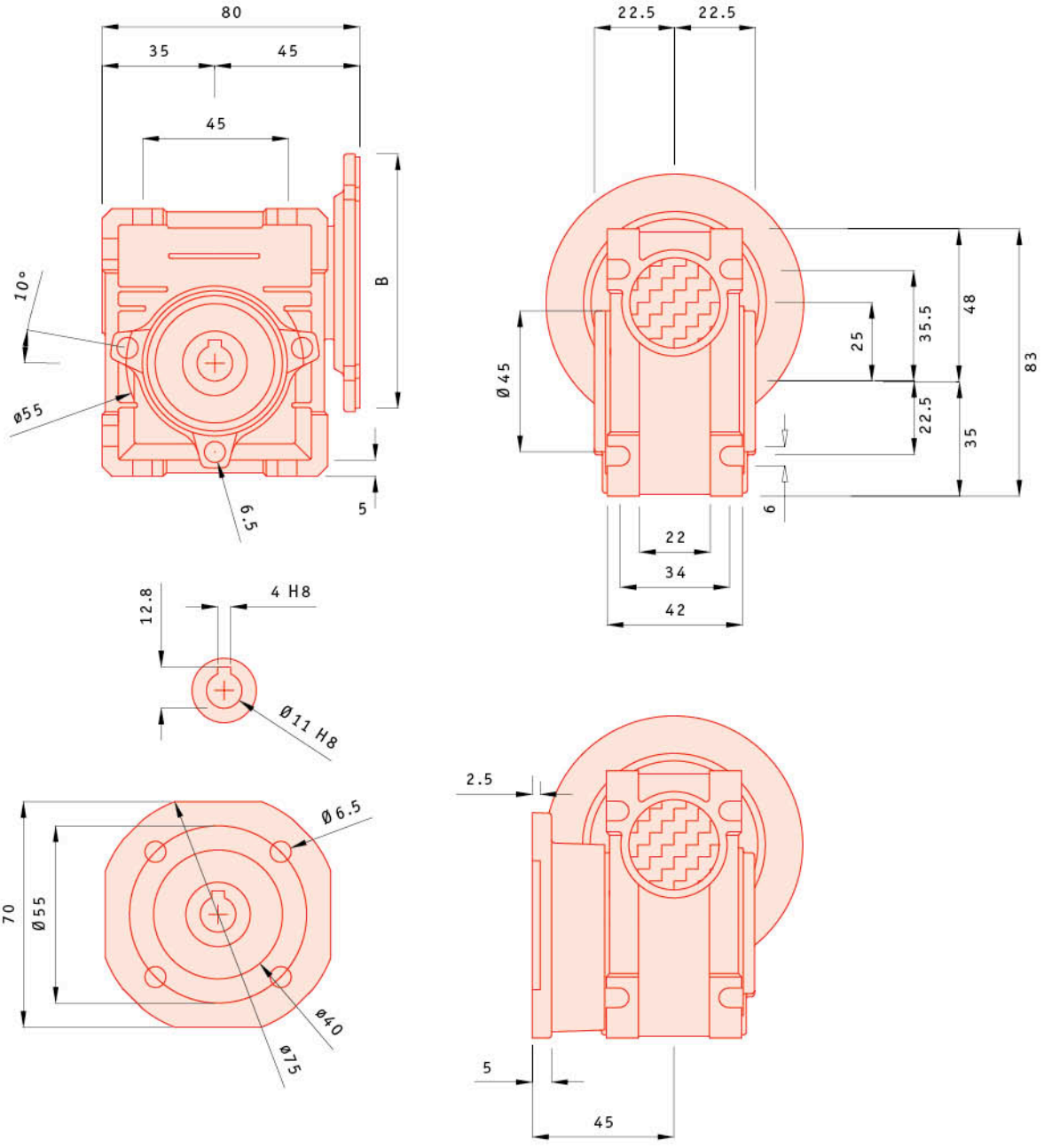


Para las dimensiones de acoplamiento a motor (cota B) consulte la tabla de la página 14.
*For dimensions concerning the motor coupling (dimensions B) please refer to the table on page 14.*

# MSF MOTOREDUCTORES DE VIS SIN FIN
# *MSF SERIES WORM GEARED MOTORS*

## DIMENSIONS / *OVERALL DIMENSIONS*

### MSF 030 - 130

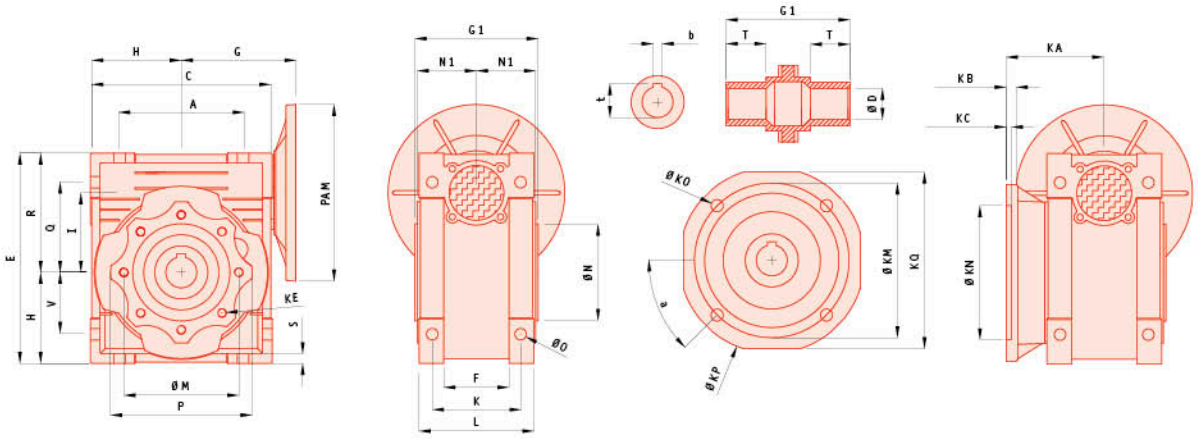


| Tamaño *Size* | A | B | C | D (H7) | E | F | G | G1 | H | I | L | M | N (h8) | N1 | O | P | Q | R |
|---|---|---|---|---|---|---|---|---|---|---|---|---|---|---|---|---|---|---|
| **030** | 54 | 20 | 80 | 14 | 97 | 32 | 55 | 63 | 40 | 30 | 56 | 65 | 55 | 29 | 6.5 | 75 | 44 | 57 |
| **040** | 70 | 23 | 100 | 18 (19) | 121.5 | 43 | 70 | 78 | 50 | 40 | 71 | 75 | 60 | 36.5 | 6.5 | 87 | 55 | 71.5 |
| **050** | 80 | 30 | 120 | 25 (24) | 144 | 49 | 80 | 92 | 60 | 50 | 85 | 85 | 70 | 43.5 | 8.5 | 100 | 64 | 84 |
| **063** | 100 | 40 | 144 | 25 (28) | 174 | 67 | 95 | 112 | 72 | 63 | 103 | 95 | 80 | 53 | 8.5 | 110 | 80 | 102 |
| **075** | 120 | 50 | 172 | 28 (35) | 205 | 72 | 112.5 | 120 | 86 | 75 | 112 | 115 | 95 | 57 | 11 | 140 | 93 | 119 |
| **090** | 140 | 50 | 208 | 35 (28) | 238 | 74 | 129.5 | 140 | 103 | 90 | 130 | 130 | 110 | 67 | 13 | 160 | 102 | 135 |
| **110** | 170 | 60 | 252.5 | 42 | 295 | - | 160 | 155 | 127.5 | 110 | 144 | 165 | 130 | 74 | 14 | 200 | 125 | 167.5 |
| **130** | 200 | 80 | 292.5 | 45 | 335 | - | 180 | 170 | 147.5 | 130 | 155 | 215 | 180 | 81 | 16 | 250 | 140 | 187.5 |

| Tamaño *Size* | S | T | V | K | KA | KB | KC | KE | a | KM | KN (H8) | KO | KP | KQ | b | t | kg |
|---|---|---|---|---|---|---|---|---|---|---|---|---|---|---|---|---|---|
| **030** | 5.5 | 21 | 27 | 44 | 54.5 | 6 | 4 | M6x11 (4) | 45° | 68 | 50 | 6.5 | 80 | 70 | 5 | 16.3 | 1.2 |
| **040** | 6.5 | 26 | 35 | 60 | 67 | 7 | 4 | M6x11 (4) | 45° | 87 | 60 | 9 | 110 | 95 | 6 (6) | 20.8 (21.8) | 2.3 |
| **050** | 7 | 30 | 40 | 70 | 90 | 9 | 5 | M8x10 (4) | 45° | 90 | 70 | 11 | 125 | 110 | 8 (8) | 28.3 (27.3) | 3.5 |
| **063** | 8 | 36 | 50 | 85 | 82 | 10 | 6 | M8x14 (8) | 45° | 150 | 115 | 11 | 180 | 142 | 8 (8) | 28.3 (31.3) | 6.2 |
| **075** | 10 | 40 | 60 | 90 | 111 | 13 | 6 | M8x14 (8) | 45° | 165 | 130 | 14 | 200 | 170 | 8 (10) | 31.3 (38.3) | 9 |
| **090** | 11 | 45 | 70 | 100 | 111 | 13 | 6 | M10x18 (8) | 45° | 175 | 152 | 14 | 210 | 200 | 10 (10) | 38.3 (41.3) | 13 |
| **110** | 14 | 50 | 85 | 115 | 131 | 15 | 6 | M10x18 (8) | 45° | 230 | 170 | 14 | 280 | 260 | 12 | 45.3 | 35 |
| **130** | 15 | 60 | 100 | 120 | 140 | 15 | 6 | M12x21 (8) | 22.5° | 255 | 180 | 16 | 320 | 290 | 14 | 48.8 | 48 |

Para las dimensiones de acoplamiento a motor (cota PAM) consulte la tabla de la página 14.
*For dimensions concerning the motor coupling (dimension PAM) please refer to the table on page 14.*

# BRIDAS ESPECIALES / *SPECIAL OUTPUT FLANGES*

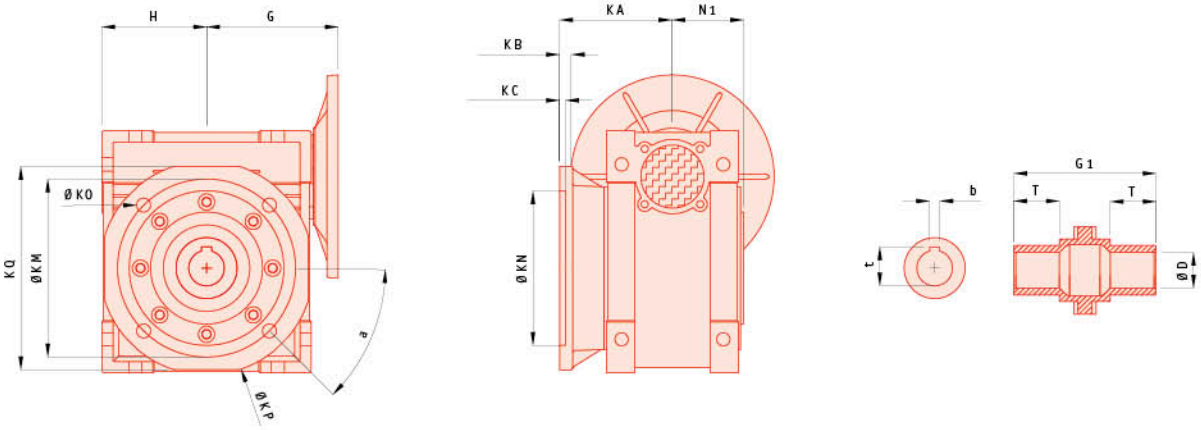


| Tamaño *Size* | | D (H7) | G | G1 | H | N1 | T | KA | KB | KC | a | KM | KO | KN (H8) | KP | KQ | t | kg |
|---|---|---|---|---|---|---|---|---|---|---|---|---|---|---|---|---|---|---|
| 040 | FB | 18 | 70 | 78 | 50 | 36.5 | 26 | 97 | 7 | 4 | 45º | 87 | 60 | 9 | 110 | 95 | 6 | 20.8 |
| | FC | (19) | | | | | | 80 | 9 | 5 | 45º | 115 | 95 | 9.5 | 140 | - | (6) | (21.8) |
| | FD | | | | | | | 58 | 12 | 5 | 45º | 100 | 80 | 9 | 120 | - | | |
| 050 | FB | 25 | 80 | 92 | 60 | 43.5 | 30 | 120 | 9 | 5 | 45º | 87 | 70 | 11 | 125 | 110 | 8 | 28.3 |
| | FC | (24) | | | | | | 89 | 10 | 5 | 45º | 130 | 110 | 9.5 | 160 | - | (8) | (27.3) |
| | FD | | | | | | | 72 | 14.5 | 5 | 45º | 115 | 95 | 11 | 140 | - | | |
| 063 | FB | 25 | 95 | 112 | 72 | 53 | 36 | 112 | 10 | 6 | 45º | 150 | 115 | 11 | 180 | 142 | 8 | 28.3 |
| | FC | (28) | | | | | | 98 | 10 | 5 | 45º | 165 | 130 | 11 | 200 | - | (8) | (31.3) |
| | FD | | | | | | | 107 | 10 | 5 | 45º | 165 | 130 | 11 | 200 | - | | |
| | FE | | | | | | | 80.5 | 16.5 | 5 | 45º | 130 | 110 | 11 | 160 | - | | |
| 075 | FB | 28 (35) | 112.5 | 120 | 86 | 57 | 40 | 90 | 13 | 6 | 45º | 130 | 110 | 11 | 160 | - | 8 (10) | 31.3 (38.3) |
| 090 | FB | 35 | 129.5 | 140 | 103 | 67 | 45 | 122 | 18 | 6 | 45º | 215 | 180 | 14 | 250 | - | 10 | 38.3 |
| | FC | (38) | | | | | | 110 | 17 | 6 | 45º | 165 | 130 | 11 | 200 | - | (10) | (41.3) |
| | FD | | | | | | | 151 | 13 | 6 | 45º | 175 | 152 | 14 | 210 | 200 | | |
| 110 | FB | 42 | 160 | 155 | 127.5 | 74 | 50 | 130 | 18 | 5 | 45º | 215 | 180 | 15 | 250 | - | 12 | 45.3 |

# MODELOS CON ÁRBOL DE ENTRADA SIMPLE Y DOBLE
# *SINGLE AND DOUBLE INPUT SHAFT MODEL*

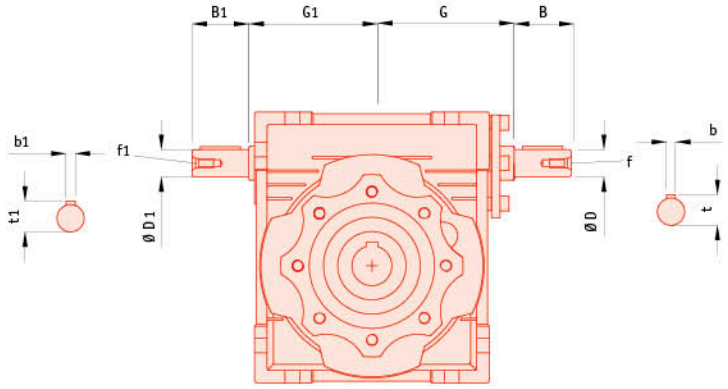


| Tamaño *Size* | B | G | D (j6) | f | b | t | B1 | G1 | D1 (j6) | f1 | b1 | t1 |
|---|---|---|---|---|---|---|---|---|---|---|---|---|
| 030 | 20 | 51 | 9 | - | 3 | 10.2 | 20 | 45 | 9 | - | 3 | 10.2 |
| 040 | 23 | 60 | 11 | - | 4 | 12.5 | 23 | 53 | 11 | - | 4 | 12.5 |
| 050 | 30 | 74 | 14 | M6 | 5 | 16.0 | 30 | 64 | 14 | M6 | 5 | 16.0 |
| 063 | 40 | 90 | 19 | M6 | 6 | 21.5 | 40 | 75 | 19 | M6 | 6 | 21.5 |
| 075 | 50 | 105 | 24 | M8 | 8 | 27.0 | 50 | 90 | 24 | M8 | 8 | 27.0 |
| 090 | 50 | 125 | 24 | M8 | 8 | 27.0 | 50 | 108 | 24 | M8 | 8 | 27.0 |
| 110 | 60 | 142 | 28 | M10 | 8 | 31.0 | 60 | 135 | 28 | M10 | 8 | 31.0 |
| 130 | 80 | 162 | 30 | M10 | 8 | 33.0 | 80 | 155 | 30 | M10 | 8 | 33.0 |

# MSF MOTOREDUCTORES DE VIS SIN FIN
# *MSF SERIES WORM GEARED MOTORS*

## PREDISPOSICIÓN DE ACOPLAMIENTO A MOTOR / *MOTOR COUPLING*

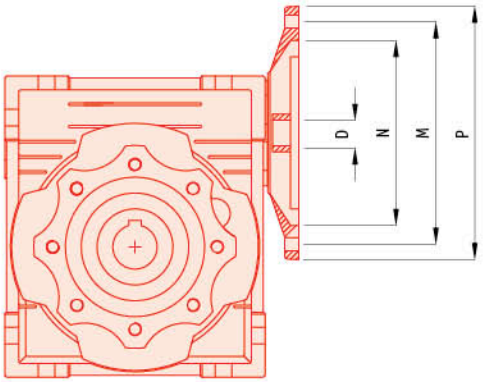


| TIPO *TYPE* | PAM *IEC* | N | M | P | D 7.5 | 10 | 15 | 20 | 25 | 30 | 40 | 50 | 60 | 80 | 100 |
|---|---|---|---|---|---|---|---|---|---|---|---|---|---|---|---|
| MSF 025 | 56 B14 | 50 | 65 | 80 | 9 | 9 | 9 | 9 | - | 9 | 9 | 9 | 9 | - | - |
| MSF 030 | 63 B5 | 95 | 115 | 140 | 11 | 11 | 11 | 11 | 11 | 11 | 11 | - | - | - | - |
| | 63 B14 | 60 | 75 | 90 | | | | | | | | | | | |
| | 56 B5 | 80 | 100 | 120 | 9 | 9 | 9 | 9 | 9 | 9 | 9 | 9 | 9 | 9 | - |
| | 56 B14 | 50 | 65 | 80 | | | | | | | | | | | |
| MSF 040 | 71 B5 | 110 | 130 | 160 | 14 | 14 | 14 | 14 | 14 | 14 | 14 | - | - | - | - |
| | 71 B14 | 70 | 85 | 105 | | | | | | | | | | | |
| | 63 B5 | 95 | 115 | 140 | 11 | 11 | 11 | 11 | 11 | 11 | 11 | 11 | 11 | 11 | 11 |
| | 63 B14 | 60 | 75 | 90 | | | | | | | | | | | |
| | 56 B5 | 80 | 100 | 120 | - | - | - | - | - | - | - | 9 | 9 | 9 | 9 |
| MSF 050 | 80 B5 | 130 | 165 | 200 | 19 | 19 | 19 | 19 | 19 | 19 | - | - | - | - | - |
| | 80 B14 | 80 | 100 | 120 | | | | | | | | | | | |
| | 71 B5 | 110 | 130 | 160 | 14 | 14 | 14 | 14 | 14 | 14 | 14 | 14 | 14 | 14 | - |
| | 71 B14 | 70 | 85 | 105 | | | | | | | | | | | |
| | 63 B5 | 95 | 115 | 140 | - | - | - | - | - | - | 11 | 11 | 11 | 11 | 11 |
| MSF 063 | 90 B5 | 130 | 165 | 200 | 24 | 24 | 24 | 24 | 24 | 24 | - | - | - | - | - |
| | 90 B14 | 95 | 115 | 140 | | | | | | | | | | | |
| | 80 B5 | 130 | 165 | 200 | 19 | 19 | 19 | 19 | 19 | 19 | 19 | 19 | 19 | - | - |
| | 80 B14 | 80 | 100 | 120 | | | | | | | | | | | |
| | 71 B5 | 110 | 130 | 160 | - | - | - | - | - | - | 14 | 14 | 14 | 14 | 14 |
| | 71 B14 | 70 | 85 | 105 | | | | | | | | | | | |
| MSF 075 | 100/112 B5 | 180 | 215 | 250 | 28 | 28 | 28 | - | - | - | - | - | - | - | - |
| | 100/112 B14 | 110 | 130 | 160 | | | | | | | | | | | |
| | 90 B5 | 130 | 165 | 200 | 24 | 24 | 24 | 24 | 24 | 24 | 24 | - | - | - | - |
| | 90 B14 | 95 | 115 | 140 | | | | | | | | | | | |
| | 80 B5 | 130 | 165 | 200 | - | - | - | 19 | 19 | 19 | 19 | 19 | 19 | 19 | 19 |
| | 80 B14 | 80 | 100 | 120 | | | | | | | | | | | |
| | 71 B5 | 110 | 130 | 160 | - | - | - | - | - | - | - | 14 | 14 | 14 | 14 |
| MSF 090 | 100/112 B5 | 180 | 215 | 250 | 28 | 28 | 28 | 28 | 28 | 28 | - | - | - | - | - |
| | 100/112 B14 | 110 | 130 | 160 | | | | | | | | | | | |
| | 90 B5 | 130 | 165 | 200 | 24 | 24 | 24 | 24 | 24 | 24 | 24 | 24 | 24 | - | - |
| | 90 B14 | 95 | 115 | 140 | | | | | | | | | | | |
| | 80 B5 | 130 | 165 | 200 | - | - | - | - | - | - | 19 | 19 | 19 | 19 | 19 |
| | 80 B14 | 80 | 100 | 120 | | | | | | | | | | | |
| MSF 110 | 132 B5 | 230 | 265 | 300 | 38 | 38 | 38 | 38 | - | - | - | - | - | - | - |
| | 100/112 B5 | 180 | 215 | 250 | 28 | 28 | 28 | 28 | 28 | 28 | 28 | 28 | 28 | - | - |
| | 90 B5 | 130 | 165 | 200 | - | - | - | - | 24 | 24 | 24 | 24 | 24 | 24 | 24 |
| | 80 B5 | 130 | 165 | 200 | - | - | - | - | - | - | - | - | - | 19 | 19 |
| MSF 130 | 132 B5 | 230 | 265 | 300 | 38 | 38 | 38 | 38 | 38 | 38 | 38 | - | - | - | - |
| | 100/112 B5 | 180 | 215 | 250 | - | - | - | - | 28 | 28 | 28 | 28 | 28 | 28 | 28 |
| | 90 B5 | 130 | 165 | 200 | - | - | - | - | - | - | - | - | - | 24 | 24 |

# ACCESORIOS
# *ACCESORIES*

## EJES DE SALIDA SIMPLES Y DOBLES
## *SINGLE AND DOUBLE OUTPUT SHAFTS*

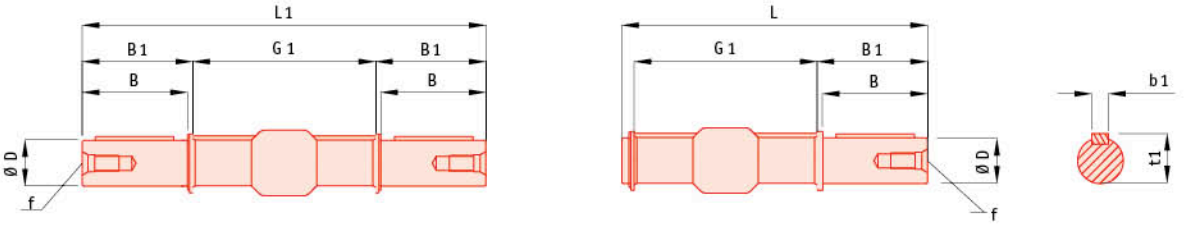


| | D h6 | B | B1 | G1 | L | L1 | f | b1 | t1 |
|---|---|---|---|---|---|---|---|---|---|
| **025** | 11 | 23 | 25.5 | 50 | 81 | 101 | - | 4 | 12.5 |
| **030** | 14 | 30 | 32.5 | 63 | 102 | 128 | M6 | 5 | 16 |
| **040** | 18 | 40 | 43 | 78 | 128 | 164 | M6 | 6 | 20.5 |
| **050** | 25 | 50 | 53.5 | 92 | 153 | 199 | M10 | 8 | 28 |
| **063** | 25 | 50 | 53.5 | 112 | 173 | 219 | M10 | 8 | 28 |
| **075** | 28 | 60 | 63.5 | 120 | 192 | 247 | M10 | 8 | 31 |
| **090** | 35 | 80 | 84.5 | 140 | 234 | 309 | M12 | 10 | 38 |
| **110** | 42 | 80 | 84.5 | 155 | 249 | 324 | M16 | 12 | 45 |
| **130** | 45 | 80 | 85 | 170 | 265 | 340 | M16 | 14 | 48.5 |

## BRAZOS DE REACCIÓN / *TORQUE ARMS*

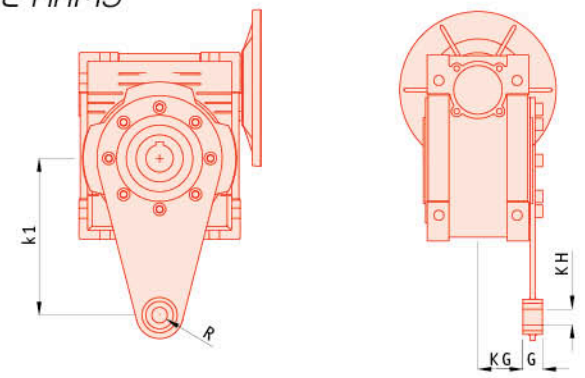


| | K1 | G | KG | KH | R |
|---|---|---|---|---|---|
| **025** | 70 | 14 | 17.5 | 8 | 15 |
| **030** | 85 | 14 | 24 | 8 | 15 |
| **040** | 100 | 14 | 31.5 | 10 | 18 |
| **050** | 100 | 14 | 38.5 | 10 | 18 |
| **063** | 150 | 14 | 49 | 10 | 18 |
| **075** | 200 | 25 | 47.5 | 20 | 30 |
| **090** | 200 | 25 | 57.5 | 20 | 30 |
| **110** | 250 | 30 | 62 | 25 | 35 |
| **130** | 250 | 30 | 69 | | |

# PR+MSF MOTOREDUCTORES DE VIS SIN FIN CON PREREDUCCION

# *PR+MSF WORM GEARED MOTORS WITH PRE-STAGE HELICAL UNIT*

## DESIGNACIÓN / *DESIGNATION*

**PR 071 - MSF 063 FA - 30 DV ES Ø25 PAM80B14 B3**

- Posición de montaje. *Mounting position.*
- Predisposición de acoplamiento a motor. *Motor coupling.*
- ø Arbol de salida hueco. *ø Output shaft bore.*
- **ES** = Eje de salida simple. *Single output shaft.*
- **ED** = Eje de salida doble. *Double output shaft.*
- **BR** = Brazo de reacción. *Torque arm.*
- **DV** = Vis prolongado. *Double input shaft.*
- Relación de reducción. *Reduction ratio.*
- Versiones brida de salida. *Output flange versions.*
  - **FA**
  - **FB**
  - **FC**
  - **FD**
  - **FE**
- Tamaño. *Size* **025 - 030 - 040 - 050 - 063 - 075 - 090 - 110 - 130.**
- **MSF** Motoreductor de vis sin fin. *Worm geared motor.*
- Tamaño. *Size* **063 - 071 - 080 - 090.**
- PR Unidad pre-reducción. *Helical pre-stage unit.*

## PR + MSF LISTADO DE POSIBLES COMBINACIONES

## *PR + MSF POSSIBLE COMBINATIONS*

| MSF | i | PR 063 105/11 i = 3 | PR 071 120/14 i = 3,17 | PR 080 160/19 i = 3 | PR090 160/24 i = 2,43 |
|---|---|---|---|---|---|
| 040 | 40 50 60 80 100 | | | | |
| 050 | 40 50 60 80 100 | | | | |
| 063 | 40 50 60 80 100 | | | | |
| 075 | 40 50 60 80 100 | | | | |
| 090 | 40 50 60 80 100 | | | | |
| 110 | 40 50 60 80 100 | | | | |
| 130 | 40 50 60 80 100 | | | | |

# Prestaciones de los motoreductores de vis sin fin con prereducción
*Performance of worm geared motors with pre-stage helical unit*

| Motor Kw | | n2 rpm | i | M2 Nm | f.s | Tipo *Type* |
|---|---|---|---|---|---|---|
| 0.09 | 6P n1=900 | 12 | 75 | 47 | 1.3 | PR 063 MSF 040 |
| | | 10 | 90 | 51 | 1.4 | |
| | | 7.5 | 120 | 62 | 1.1 | |
| | | 6.0 | 150 | 72 | 0.8 | |
| | | 5.0 | 180 | 79 | 0.7 | |
| | | 6.0 | 150 | 73 | 1.6 | PR 063 MSF 050 |
| | | 5.0 | 180 | 81 | 1.3 | |
| | | 3.8 | 240 | 94 | 0.9 | |
| | | 3.0 | 300 | 106 | 0.7 | |
| | | 3.8 | 240 | 99 | 1.7 | PR 063 MSF 063 |
| | | 3.0 | 300 | 109 | 1.4 | |
| 0.12 | 4P n1=1400 | 18.7 | 75 | 42 | 1.2 | PR 063 MSF 040 |
| | | 15.6 | 90 | 46 | 1.2 | |
| | | 11.7 | 120 | 57 | 0.9 | |
| | | 9.3 | 150 | 66 | 0.7 | |
| | | 7.8 | 180 | 74 | 0.6 | |
| | | 9.3 | 150 | 68 | 1.3 | PR 063 MSF 050 |
| | | 7.8 | 180 | 75 | 1.1 | |
| | | 5.8 | 240 | 88 | 0.8 | |
| | | 4.7 | 300 | 98 | 0.7 | |
| | | 5.8 | 240 | 92 | 1.5 | PR 063 MSF 063 |
| | | 4.7 | 300 | 103 | 1.2 | |
| | 6P n1=900 | 12 | 75 | 62 | 1.0 | PR 063 MSF 040 |
| | | 10 | 90 | 68 | 1.1 | |
| | | 7.5 | 120 | 83 | 0.8 | |
| | | 12 | 75 | 63 | 1.7 | PR 063 MSF 050 |
| | | 10 | 90 | 70 | 2.1 | |
| | | 7.5 | 120 | 84 | 1.5 | |
| | | 6.0 | 150 | 97 | 1.2 | |
| | | 5.0 | 180 | 108 | 1.0 | |
| | | 3.8 | 240 | 125 | 0.7 | |
| | | 6.0 | 150 | 101 | 2.1 | PR 063 MSF 063 |
| | | 5.0 | 180 | 112 | 1.8 | |
| | | 3.8 | 240 | 131 | 1.3 | |
| | | 3.0 | 300 | 145 | 1.0 | |
| 0.18 | 4P n1=1400 | 18.7 | 75 | 64 | 0.8 | PR 063 MSF 040 |
| | | 15.6 | 90 | 70 | 0.8 | |
| | | 11.7 | 120 | 85 | 0.6 | |
| | | 18.7 | 75 | 64 | 1.4 | PR 063 MSF 050 |
| | | 15.6 | 90 | 71 | 1.5 | |
| | | 11.7 | 120 | 87 | 1.1 | |
| | | 9.3 | 150 | 101 | 0.9 | |
| | | 7.8 | 180 | 113 | 0.7 | |
| | | 5.8 | 240 | 133 | 0.6 | |
| | | 9.3 | 150 | 103 | 1.7 | PR 063 MSF 063 |
| | | 7.8 | 180 | 117 | 1.4 | |
| | | 5.8 | 240 | 139 | 1.0 | |
| | | 4.7 | 300 | 155 | 0.9 | |
| | 6P n1=900 | 12 | 75 | 97 | 2.2 | PR 071 MSF 063 |
| | | 10 | 90 | 107 | 2.4 | |
| | | 7.5 | 120 | 131 | 1.8 | |
| | | 6.0 | 150 | 152 | 1.4 | |
| | | 5.0 | 180 | 168 | 1.2 | |
| | | 3.8 | 240 | 197 | 0.9 | |
| | | 3.0 | 300 | 218 | 0.7 | |
| | | 5.0 | 180 | 179 | 1.7 | PR 071 MSF 075 |
| | | 3.8 | 240 | 211 | 1.2 | |
| | | 3.0 | 300 | 235 | 1.0 | |

| Motor Kw | | n2 rpm | i | M2 Nm | f.s | Tipo *Type* |
|---|---|---|---|---|---|---|
| 0.25 | 4P n1=1400 | 18.7 | 75 | 88 | 1.0 | PR 071 MSF 050 |
| | | 15.6 | 90 | 98 | 1.1 | |
| | | 11.7 | 120 | 121 | 0.8 | |
| | | 18.7 | 75 | 91 | 1.8 | PR 071 MSF 063 |
| | | 15.6 | 90 | 100 | 2.0 | |
| | | 11.7 | 120 | 125 | 1.5 | |
| | | 9.3 | 150 | 143 | 1.2 | |
| | | 7.8 | 180 | 163 | 1.0 | |
| | | 5.8 | 240 | 192 | 0.7 | |
| | | 4.7 | 300 | 215 | 0.6 | |
| | | 9.3 | 150 | 151 | 1.7 | PR 071 MSF 075 |
| | | 7.8 | 180 | 172 | 1.4 | |
| | | 5.8 | 240 | 201 | 1.1 | |
| | | 4.7 | 300 | 230 | 0.9 | |
| | 6P n1=900 | 12 | 75 | 135 | 1.6 | PR 071 MSF 063 |
| | | 10 | 90 | 148 | 1.8 | |
| | | 7.5 | 120 | 181 | 1.3 | |
| | | 6.0 | 150 | 211 | 1.0 | |
| | | 12 | 75 | 139 | 2.4 | PR 071 MSF 075 |
| | | 10 | 90 | 155 | 2.5 | |
| | | 7.5 | 120 | 191 | 1.9 | |
| | | 6.0 | 150 | 219 | 1.5 | |
| | | 5.0 | 180 | 248 | 1.2 | |
| | | 5.0 | 180 | 263 | 1.9 | PR 071 MSF 090 |
| | | 3.8 | 240 | 318 | 1.4 | |
| | | 3.0 | 300 | 358 | 1.1 | |
| 0.37 | 4P n1=1400 | 18.7 | 75 | 134 | 1.2 | PR 071 MSF 063 |
| | | 15.6 | 90 | 148 | 1.4 | |
| | | 11.7 | 120 | 185 | 1.0 | |
| | | 9.3 | 150 | 212 | 0.8 | |
| | | 18.7 | 75 | 138 | 1.8 | PR 071 MSF 075 |
| | | 15.6 | 90 | 154 | 1.9 | |
| | | 11.7 | 120 | 191 | 1.5 | |
| | | 9.3 | 150 | 223 | 1.1 | |
| | | 7.8 | 180 | 254 | 0.9 | |
| | | 7.8 | 180 | 268 | 1.5 | PR 071 MSF 090 |
| | | 5.8 | 240 | 321 | 1.1 | |
| | | 4.7 | 300 | 371 | 0.9 | |
| | 6P n1=900 | 12 | 75 | 206 | 1.6 | PR 080 MSF 075 |
| | | 10 | 90 | 230 | 1.7 | |
| | | 7.5 | 120 | 283 | 1.3 | |
| | | 6.0 | 150 | 324 | 1.0 | |
| | | 6.0 | 150 | 347 | 1.6 | PR 080 MSF 090 |
| | | 5.0 | 180 | 389 | 1.3 | |
| | | 3.8 | 240 | 471 | 1.0 | |
| | | 3.8 | 240 | 509 | 1.5 | PR 080 MSF 110 |
| | | 3.0 | 300 | 577 | 1.2 | |
| 0.55 | 4P n1=1400 | 18.7 | 75 | 205 | 1.2 | PR 080 MSF 075 |
| | | 15.6 | 90 | 230 | 1.3 | |
| | | 11.7 | 120 | 284 | 1.0 | |
| | | 9.3 | 150 | 332 | 0.8 | |
| | | 15.6 | 90 | 240 | 2.3 | PR 080 MSF 090 |
| | | 11.7 | 120 | 297 | 1.6 | |
| | | 9.3 | 150 | 355 | 1.3 | |
| | | 7.8 | 180 | 398 | 1.0 | |
| | | 5.8 | 240 | 477 | 0.8 | |

# Prestaciones de los motoreductores de vis sin fin con prereducción
*Performance of worm geared motors with pre-stage helical unit*

| Motor Kw | | n2 rpm | i | M2 Nm | f.s | Tipo *Type* |
|---|---|---|---|---|---|---|
| 0.55 | 4P n1=1400 | 7.8 | 180 | 425 | 1.7 | PR 080 MSF 110 |
| | | 5.8 | 240 | 513 | 1.2 | |
| | | 4.7 | 300 | 597 | 1.0 | |
| | 6P n1=900 | 12 | 75 | 306 | 1.1 | PR 080 MSF 075 |
| | | 10 | 90 | 341 | 1.1 | |
| | | 10 | 90 | 357 | 2.0 | PR 080 MSF 090 |
| | | 7.5 | 120 | 441 | 1.4 | |
| | | 6.0 | 150 | 516 | 1.1 | |
| | | 5.0 | 180 | 578 | 0.9 | |
| | | 7.5 | 120 | 462 | 2.2 | PR 080 MSF 110 |
| | | 6.0 | 150 | 552 | 1.8 | |
| | | 5.0 | 180 | 620 | 1.5 | |
| | | 3.8 | 240 | 756 | 1.0 | |
| | | 3.8 | 240 | 756 | 1.6 | PR 080 MSF 130 |
| | | 3.0 | 300 | 858 | 1.3 | |
| 0.75 | 4P n1=1400 | 18.7 | 75 | 280 | 0.9 | PR 080 MSF 075 |
| | | 15.6 | 90 | 313 | 1.0 | |
| | | 15.6 | 90 | 327 | 1.7 | PR 080 MSF 090 |
| | | 11.7 | 120 | 405 | 1.2 | |
| | | 9.3 | 150 | 483 | 0.9 | |
| | | 7.8 | 180 | 543 | 0.7 | |
| | | 11.7 | 120 | 430 | 1.9 | PR 080 MSF 110 |
| | | 9.3 | 150 | 506 | 1.6 | |
| | | 7.8 | 180 | 580 | 1.2 | |
| | | 5.8 | 240 | 700 | 0.9 | |
| | | 5.8 | 240 | 712 | 1.4 | PR 080 MSF 130 |
| | | 4.7 | 300 | 813 | 1.1 | |
| | 6P n1=900 | 12.4 | 72.6 | 393 | 2.8 | PR 090 MSF 110 |
| | | 9.3 | 96.8 | 508 | 2.0 | |
| | | 7.4 | 121 | 607 | 1.6 | |
| | | 6.2 | 145 | 682 | 1.3 | |
| | | 4.6 | 193 | 832 | 0.9 | |
| | | 12.4 | 72.6 | 399 | 4.4 | PR 090 MSF 130 |
| | | 9.3 | 96.8 | 508 | 3.2 | |
| | | 7.4 | 121 | 607 | 2.6 | |
| | | 6.2 | 145 | 682 | 2.1 | |
| | | 4.6 | 193 | 832 | 1.5 | |
| | | 3.7 | 242 | 944 | 1.2 | |
| 1.10 | 4P n1=1400 | 19.3 | 72.6 | 392 | 2.2 | PR 090 MSF 110 |
| | | 14.5 | 96.8 | 508 | 1.6 | |
| | | 11.6 | 121 | 599 | 1.3 | |
| | | 9.6 | 145 | 686 | 1.0 | |
| | | 7.2 | 193 | 828 | 0.8 | |
| | | 19.3 | 72.6 | 398 | 3.5 | PR 080 MSF 130 |
| | | 14.5 | 96.8 | 508 | 2.6 | |
| | | 11.6 | 121 | 608 | 2.0 | |
| | | 9.6 | 145 | 686 | 1.6 | |
| | | 7.2 | 193 | 843 | 1.2 | |
| | | 5.8 | 242 | 962 | 0.9 | |
| | 6P n1=900 | 12.4 | 72.6 | 576 | 1.9 | PR 090 MSF 110 |
| | | 9.3 | 96.8 | 746 | 1.4 | |
| | | 7.4 | 121 | 890 | 1.1 | |
| | | 6.2 | 145 | 1000 | 0.9 | |
| | | 12.4 | 72.6 | 585 | 3.0 | PR 090 MSF 130 |
| | | 9.3 | 96.8 | 746 | 2.2 | |
| | | 7.4 | 121 | 890 | 1.7 | |
| | | 6.2 | 145 | 1000 | 1.4 | |
| | | 4.6 | 193 | 1220 | 1.0 | |

| Motor Kw | | n2 rpm | i | M2 Nm | f.s | Tipo *Type* |
|---|---|---|---|---|---|---|
| 1.50 | 4P n1=1400 | 19.3 | 72.6 | 535 | 1.6 | PR 090 MSF 110 |
| | | 14.5 | 96.8 | 693 | 1.2 | |
| | | 11.6 | 121 | 817 | 1.0 | |
| | | 9.6 | 145 | 936 | 0.8 | |
| | | 19.3 | 72.6 | 542 | 2.6 | PR 090 MSF 130 |
| | | 14.5 | 96.8 | 693 | 1.9 | |
| | | 11.6 | 121 | 830 | 1.5 | |
| | | 9.6 | 145 | 936 | 1.1 | |
| | | 7.2 | 193 | 1149 | 0.8 | |
| 2.20 | 2P n1=2800 | 38.6 | 72.6 | 398 | 1.8 | PR 090 MSF 110 |
| | | 28.9 | 96.8 | 516 | 1.3 | |
| | | 23.1 | 121 | 617 | 1.1 | |
| | | 38.6 | 72.6 | 409 | 2.9 | PR 090 MSF 130 |
| | | 28.9 | 96.8 | 545 | 2.0 | |
| | | 23.1 | 121 | 654 | 1.6 | |
| | | 19.3 | 145 | 752 | 1.3 | |

# PR+MSF MOTOREDUCTORES DE VIS SIN FIN CON PREREDUCCION

# *PR+MSF WORM GEARED MOTORS WITH PRE-STAGE HELICAL UNIT*

## DIMENSIONS / *OVERALL DIMENSIONS*

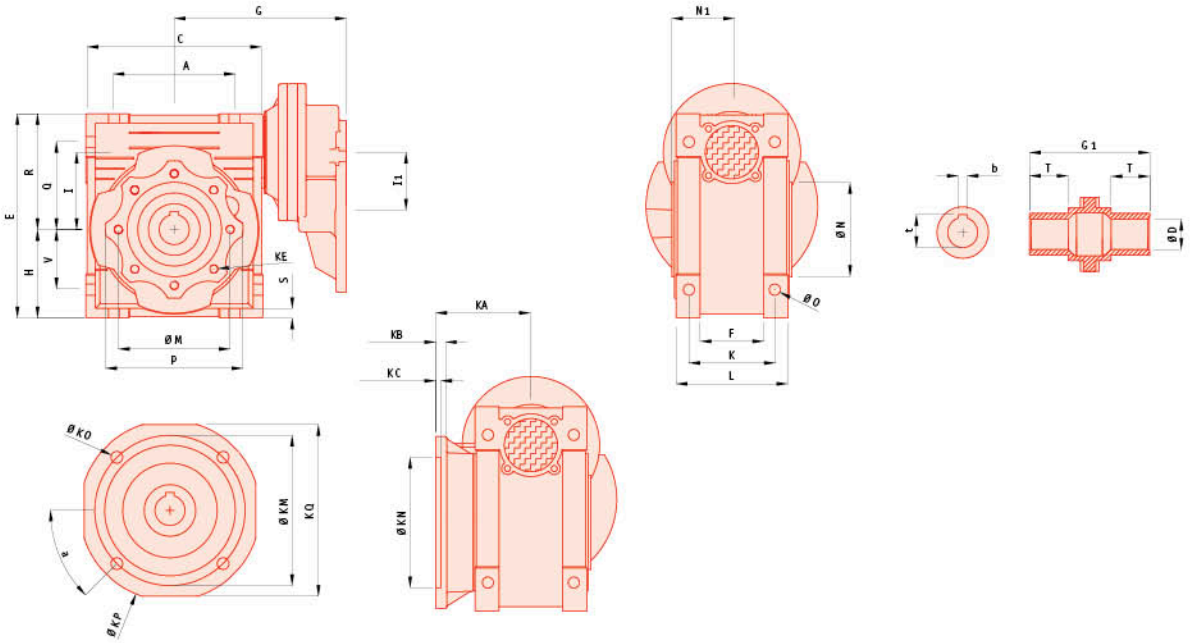


| Tamaño *Size* | A | C | D (H7) | E | F | G | G1 | H | I | I1 | L | M | N (h8) | N1 | O | P | Q | R |
|---|---|---|---|---|---|---|---|---|---|---|---|---|---|---|---|---|---|---|
| 063 / 040 | 70 | 100 | 18 | 121.5 | 43 | 123 | 78 | 50 | 40 | 40 | 71 | 75 | 60 | 36.5 | 6.5 | 87 | 55 | 71.5 |
| 063 / 050 | 80 | 120 | 25 | 144 | 49 | 133 | 92 | 60 | 50 | 40 | 85 | 85 | 70 | 43.5 | 8.5 | 100 | 64 | 84 |
| 071 / 050 | 80 | 120 | 25 | 144 | 49 | 143 | 92 | 60 | 50 | 50 | 85 | 85 | 70 | 43.5 | 8.5 | 100 | 64 | 84 |
| 063 / 063 | 100 | 144 | 25 | 174 | 67 | 148 | 112 | 72 | 63 | 40 | 103 | 95 | 80 | 53 | 8.5 | 110 | 80 | 102 |
| 071 / 063 | 100 | 144 | 25 | 174 | 67 | 158 | 112 | 72 | 63 | 50 | 103 | 95 | 80 | 53 | 8.5 | 110 | 80 | 102 |
| 071 / 075 | 120 | 172 | 28 | 205 | 72 | 176 | 120 | 86 | 75 | 50 | 112 | 115 | 95 | 57 | 11 | 140 | 93 | 119 |
| 080 / 075 | 120 | 172 | 28 | 205 | 72 | 186 | 120 | 86 | 75 | 63 | 112 | 115 | 95 | 57 | 11 | 140 | 93 | 119 |
| 071 / 090 | 140 | 208 | 35 | 238 | 74 | 193 | 140 | 103 | 90 | 50 | 130 | 130 | 110 | 67 | 13 | 160 | 102 | 135 |
| 080 / 090 | 140 | 208 | 35 | 238 | 74 | 203 | 140 | 103 | 90 | 63 | 130 | 130 | 110 | 67 | 13 | 160 | 102 | 135 |
| 80(90)/110 | 170 | 252.5 | 42 | 295 | - | 233 | 155 | 127.5 | 110 | 63 | 144 | 165 | 130 | 74 | 14 | 200 | 125 | 167.5 |
| 80(90)/130 | 200 | 292.5 | 45 | 335 | - | 253 | 170 | 147.5 | 130 | 63 | 155 | 215 | 180 | 81 | 16 | 250 | 140 | 187.5 |

| Tamaño *Size* | S | T | V | K | KA | KB | KC | KE | a | KM | KN (H8) | KO | KP | KQ | b | t | kg |
|---|---|---|---|---|---|---|---|---|---|---|---|---|---|---|---|---|---|
| 063 / 040 | 6.5 | 26 | 35 | 60 | 67 | 7 | 4 | M6 x 8 (4) | 45º | 87 | 60 | 9 | 110 | 95 | 6 | 20.8 | 3.9 |
| 063 / 050 | 7 | 30 | 40 | 70 | 90 | 9 | 5 | M8 x 10 (4) | 45º | 90 | 70 | 11 | 125 | 110 | 8 | 28.3 | 5.2 |
| 071 / 050 | 7 | 30 | 40 | 70 | 90 | 9 | 5 | M8 x 10 (4) | 45º | 90 | 70 | 11 | 125 | 110 | 8 | 28.3 | 5.8 |
| 063 / 063 | 8 | 36 | 50 | 85 | 82 | 10 | 6 | M8 x 14 (8) | 45º | 150 | 115 | 11 | 180 | 142 | 8 | 28.3 | 7.9 |
| 071 / 063 | 8 | 36 | 50 | 85 | 82 | 10 | 6 | M8 x 14 (8) | 45º | 150 | 115 | 11 | 180 | 142 | 8 | 28.3 | 8.5 |
| 071 / 075 | 10 | 40 | 60 | 90 | 111 | 13 | 6 | M8 x 14 (8) | 45º | 165 | 130 | 14 | 200 | 170 | 8 | 31.3 | 11.3 |
| 080 / 075 | 10 | 40 | 60 | 90 | 111 | 13 | 6 | M8 x 14 (8) | 45º | 165 | 130 | 14 | 200 | 170 | 8 | 31.3 | 13.1 |
| 071 / 090 | 11 | 45 | 70 | 100 | 111 | 13 | 6 | M10 x 18 (8) | 45º | 175 | 152 | 14 | 210 | 200 | 10 | 38.3 | 15.3 |
| 080 / 090 | 11 | 45 | 70 | 100 | 111 | 13 | 6 | M10 x 18 (8) | 45º | 175 | 152 | 14 | 210 | 200 | 10 | 38.3 | 17.3 |
| 80(90)/110 | 14 | 50 | 85 | 115 | 131 | 15 | 6 | M10 x 18 (8) | 45º | 230 | 170 | 14 | 280 | 260 | 12 | 45.3 | 39 |
| 80(90)/130 | 15 | 60 | 100 | 120 | 140 | 15 | 6 | M12 x 21 (8) | 45º | 255 | 180 | 16 | 320 | 290 | 14 | 48.8 | 52.2 |

Para las dimensiones de acoplamiento a motor (cota PAM) consulte la tabla de la página 14.
*For dimensions concerning the motor coupling (dimension PAM) please refer to the table on page 14.*



JAIMAC | cosgra

# MSF / MSF MOTOREDUCTORES DE DOBLE VIS SIN FIN
# *MSF / MSF COMBINED WORM GEARED MOTORS*

## DESIGNACIÓN / *DESIGNATION*

**MSF 050/110 FA - 900 DV ES Ø25 PAM80B14 B3**

- **MSF** Motoreductor de vis sin fin. *Worm geared motor.*
  **SF** Reductor de vis sin fin con eje de entrada. *Worm gearbox with input shaft.*
- Tamaño. *Size.*
- **FA**
  **FB**
  **FC**
  **FD**
  **FE**
  Versiones brida de salida. *Output flange versions.*
- Relación de reducción. *Reduction ratio.*
- **DV** = Vis prolongado. *Double input shaft.*
- **ES** = Eje de salida simple. *Single output shaft.*
  **ED** = Eje de salida doble. *Double output shaft.*
  **BR** = Brazo de reacción. *Torque arm.*
- ø Arbol de salida hueco.
  *ø Output shaft bore.*
- Predisposición de acoplamiento a motor.
  *Motor coupling.*
- Posición de montaje.
  *Mounting position.*

## SENTIDOS DE ROTACIÓN / *DIRECTION OR ROTATION*

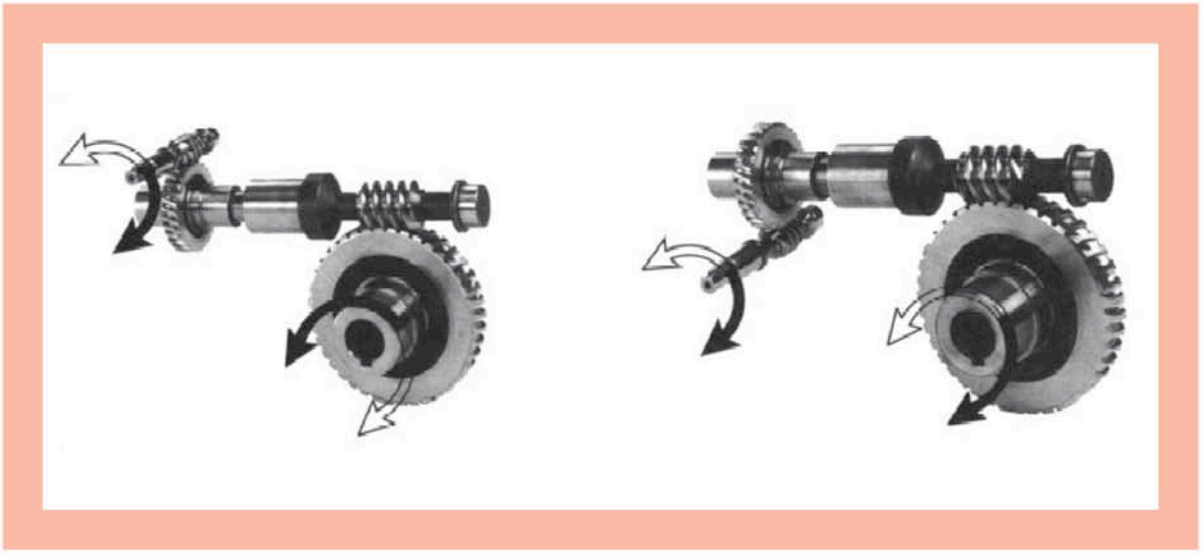

# Prestaciones de los motoreductores de doble vis sin fin
# *Performance of combined worm geared motors*

| Motor Kw | | n2 rpm | i | M2 Nm | f.s | Tipo *Type* |
|---|---|---|---|---|---|---|
| 0.06 | 4P n1=1400 | 4.7 | 300 | 57 | 1.3 | MSF 030/040 |
| | | 3.5 | 400 | 70 | 0.9 | |
| | | 2.8 | 500 | 96 | 0.6 | |
| | | 2.3 | 600 | 104 | 0.7 | |
| | | 1.9 | 750 | 121 | 0.6 | |
| | | 1.6 | 900 | 139 | 0.5 | |
| | | 1.2 | 1200 | 166 | 0.4 | |
| | | 0.9 | 1500 | 196 | 0.4 | |
| | | 0.8 | 1800 | 218 | 0.3 | |
| | | 0.58 | 2400 | 261 | 0.2 | |
| | | 0.4 | 3200 | 300 | 0.2 | |
| | | 1.6 | 900 | 141 | 1.0 | MSF 030/050 |
| | | 1.2 | 1200 | 169 | 0.7 | |
| | | 0.93 | 1500 | 199 | 0.7 | |
| | | 0.78 | 1800 | 222 | 0.7 | |
| | | 0.6 | 2400 | 266 | 0.5 | |
| | | 0.5 | 3000 | 307 | 0.4 | |
| | | 0.35 | 4000 | 288 | 0.3 | |
| | | 0.29 | 4800 | 311 | 0.3 | |
| | | 0.93 | 1500 | 204 | 1.1 | MSF 030/063 |
| | | 0.78 | 1800 | 225 | 0.9 | |
| | | 0.58 | 2400 | 276 | 0.8 | |
| | | 0.47 | 3000 | 319 | 0.7 | |
| | | 0.35 | 4000 | 306 | 0.6 | |
| | | 0.28 | 5000 | 360 | 0.4 | |
| | | 0.58 | 2400 | 330 | 1.1 | MSF 040/075 |
| | | 0.47 | 3000 | 377 | 0.8 | |
| | | 0.35 | 4000 | 355 | 0.7 | |
| | | 0.28 | 5000 | 419 | 0.5 | |
| | | 0.47 | 3000 | 406 | 1.4 | MSF 040/090 |
| | | 0.35 | 4000 | 365 | 1.3 | |
| | | 0.28 | 5000 | 431 | 1.0 | |
| 0.09 | 4P n1=1400 | 4.7 | 300 | 88 | 0.8 | MSF 030/040 |
| | | 3.5 | 400 | 65 | 0.7 | |
| | | 3.5 | 400 | 107 | 1.2 | MSF 030/050 |
| | | 2.8 | 500 | 123 | 1.0 | |
| | | 2.3 | 600 | 159 | 0.9 | |
| | | 1.9 | 750 | 185 | 0.8 | |
| | | 1.6 | 900 | 212 | 0.7 | |
| | | 1.6 | 900 | 200 | 1.0 | MSF 030/063 |
| | | 1.2 | 1200 | 263 | 0.9 | |
| | | 0.93 | 1500 | 305 | 0.7 | |
| | | 0.93 | 1500 | 360 | 1.1 | MSF 040/075 |
| | | 0.78 | 1800 | 404 | 1.0 | |
| | | 0.58 | 2400 | 496 | 0.7 | |
| | | 0.47 | 3000 | 609 | 0.9 | MSF 040/090 |
| | | 0.35 | 4000 | 548 | 0.8 | |
| 0.12 | 4P n1=1400 | 4.7 | 300 | 119 | 1.2 | MSF 030/050 |
| | | 3.5 | 400 | 142 | 0.9 | |
| | | 2.8 | 500 | 164 | 0.7 | |
| | | 2.8 | 500 | 171 | 1.3 | MSF 030/063 |
| | | 2.3 | 600 | 208 | 1.1 | |
| | | 1.9 | 750 | 241 | 0.9 | |
| | | 1.6 | 900 | 325 | 1.2 | MSF 040/075 |
| | | 1.2 | 1200 | 399 | 0.9 | |
| | | 0.78 | 1800 | 547 | 0.9 | MSF 040/090 |
| | | 0.58 | 2400 | 695 | 0.9 | |
| | | 0.47 | 3000 | 884 | 1.1 | MSF 050/110 |
| | | 0.35 | 4000 | 784 | 1.0 | |
| | | 0.28 | 5000 | 928 | 0.8 | |

| Motor Kw | | n2 rpm | i | M2 Nm | f.s | Tipo *Type* |
|---|---|---|---|---|---|---|
| 0.18 | 4P n1=1400 | 3.5 | 400 | 222 | 1.0 | MSF 030/063 |
| | | 2.8 | 500 | 257 | 0.8 | |
| | | 2.3 | 600 | 362 | 1.1 | MSF 040/075 |
| | | 1.9 | 750 | 435 | 0.9 | |
| | | 1.6 | 900 | 487 | 0.8 | |
| | | 1.2 | 1200 | 629 | 1.0 | MSF 040/090 |
| | | 0.93 | 1500 | 735 | 0.8 | |
| | | 0.78 | 1800 | 861 | 1.3 | MSF 050/110 |
| | | 0.58 | 2400 | 1113 | 0.9 | |
| 0.25 | 4P n1=1400 | 3.5 | 400 | 336 | 1.1 | MSF 040/075 |
| | | 2.8 | 500 | 384 | 0.8 | |
| | | 2.3 | 600 | 512 | 1.2 | MSF 040/090 |
| | | 1.9 | 750 | 598 | 0.9 | |
| | | 1.6 | 900 | 667 | 0.8 | |
| | | 1.2 | 1200 | 943 | 1.1 | MSF 050/110 |
| | | 0.93 | 1500 | 1064 | 1.0 | |
| | | 0.78 | 1800 | 1195 | 0.9 | |
| | | 0.58 | 2400 | 1624 | 1.0 | MSF 063/130 |
| | | 0.47 | 3000 | 1935 | 0.8 | |
| | | 0.35 | 4000 | 2046 | 0.6 | |
| | | 0.28 | 5000 | 2430 | 0.5 | |
| 0.37 | 4P n1=1400 | 4.7 | 300 | 405 | 1.0 | MSF 040/075 |
| | | 3.5 | 400 | 498 | 0.7 | |
| | | 4.7 | 300 | 402 | 1.5 | MSF 040/090 |
| | | 3.5 | 400 | 523 | 1.2 | |
| | | 2.8 | 500 | 611 | 0.9 | |
| | | 2.3 | 600 | 757 | 0.8 | |
| | | 1.9 | 750 | 950 | 1.2 | MSF 050/110 |
| | | 1.6 | 900 | 1079 | 1.0 | |
| | | 1.2 | 1200 | 1396 | 0.7 | |
| | | 0.93 | 1500 | 1674 | 1.1 | MSF 063/130 |
| | | 0.78 | 1800 | 1887 | 0.9 | |
| 0.55 | 4P n1=1400 | 4.7 | 300 | 639 | 1.7 | MSF 050/110 |
| | | 3.5 | 400 | 826 | 1.2 | |
| | | 2.8 | 500 | 984 | 1.0 | |
| | | 2.3 | 600 | 1181 | 0.9 | |
| | | 1.9 | 750 | 1411 | 0.8 | |
| | | 2.8 | 500 | 996 | 1.6 | MSF 063/130 |
| | | 1.9 | 750 | 1471 | 1.2 | |
| | | 1.2 | 1200 | 2132 | 0.8 | |
| 0.75 | 4P n1=1400 | 4.7 | 300 | 871 | 1.3 | MSF 050/110 |
| | | 3.5 | 400 | 1126 | 0.9 | |
| | | 2.8 | 500 | 1358 | 1.1 | MSF 063/130 |
| | | 2.3 | 600 | 1631 | 1.0 | |
| | | 1.9 | 750 | 2005 | 0.9 | |
| | | 1.6 | 900 | 2283 | 0.8 | |
| 1.10 | 4P n1=1400 | 4.7 | 300 | 1312 | 1.3 | MSF 063/130 |
| | | 3.5 | 400 | 1671 | 1.0 | |
| | | 2.8 | 500 | 1991 | 0.8 | |
| 1.50 | 4P n1=1400 | 4.7 | 300 | 1789 | 1.0 | MSF 063/130 |
| | | 3.5 | 400 | 2279 | 0.7 | |

# MSF / MSF MOTOREDUCTORES DE DOBLE VIS SIN FIN
# *MSF / MSF COMBINED WORM GEARED MOTORS*

## DIMENSIONS / *OVERALL DIMENSIONS*

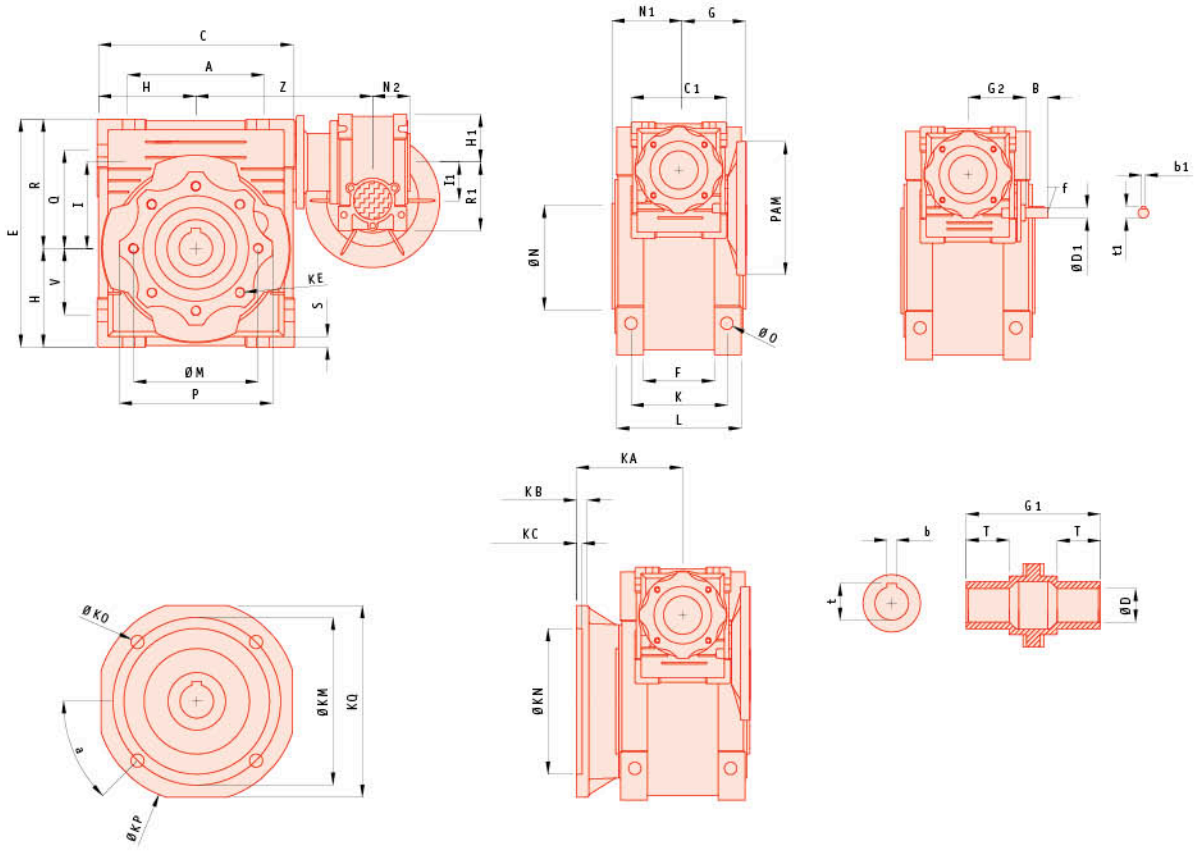


| Tamaño *Size* | A | B | C | C1 | D (H7) | D1 (j6) | E | F | G | G1 | G2 | H | H1 | I | I1 | L | M | N (h8) | N1 | N2 | O | P | Q | R |
|---|---|---|---|---|---|---|---|---|---|---|---|---|---|---|---|---|---|---|---|---|---|---|---|---|
| 030 / 040 | 70 | 20 | 100 | 80 | 18 | 9 | 121.5 | 43 | 55 | 78 | 51 | 50 | 40 | 40 | 30 | 71 | 75 | 60 | 36.5 | 29 | 6.5 | 87 | 55 | 71.5 |
| 030 / 050 | 80 | 20 | 120 | 80 | 25 | 9 | 144 | 49 | 55 | 92 | 51 | 60 | 40 | 50 | 30 | 85 | 85 | 70 | 43.5 | 29 | 8.5 | 100 | 64 | 84 |
| 030 / 063 | 100 | 20 | 144 | 80 | 25 | 9 | 174 | 67 | 55 | 112 | 51 | 72 | 40 | 63 | 30 | 103 | 95 | 80 | 53 | 29 | 8.5 | 110 | 80 | 102 |
| 040 / 075 | 120 | 23 | 172 | 100 | 28 | 11 | 205 | 72 | 70 | 120 | 60 | 86 | 50 | 75 | 40 | 112 | 115 | 95 | 57 | 36.5 | 11 | 140 | 93 | 119 |
| 040 / 090 | 140 | 23 | 208 | 100 | 35 | 11 | 238 | 74 | 70 | 140 | 60 | 103 | 50 | 90 | 40 | 130 | 130 | 110 | 67 | 36.5 | 13 | 160 | 102 | 135 |
| 050 /110 | 170 | 30 | 252.5 | 120 | 42 | 14 | 295 | - | 80 | 155 | 74 | 127.5 | 60 | 110 | 50 | 144 | 165 | 130 | 74 | 43.5 | 14 | 200 | 125 | 167.5 |
| 063 /130 | 200 | 40 | 292.5 | 144 | 45 | 19 | 335 | - | 95 | 170 | 90 | 147.5 | 72 | 130 | 63 | 155 | 215 | 180 | 81 | 53 | 16 | 250 | 140 | 187.5 |

| Tamaño *Size* | R1 | S | T | V | Z | K | KA | KB | KC | KE | a | KM | KN (H8) | KO | KP | KQ | b | b1 | f | t | t1 | kg |
|---|---|---|---|---|---|---|---|---|---|---|---|---|---|---|---|---|---|---|---|---|---|---|
| 030 / 040 | 57 | 6.5 | 26 | 35 | 120 | 60 | 67 | 7 | 4 | M6 x 8 (4) | 45º | 87 | 60 | 9 | 110 | 95 | 6 | 3 | - | 20.8 | 10.2 | 3.9 |
| 030 / 050 | 57 | 7 | 30 | 40 | 130 | 70 | 90 | 9 | 5 | M8 x 10 (4) | 45º | 90 | 70 | 11 | 125 | 110 | 8 | 3 | - | 28.3 | 10.2 | 5.0 |
| 030 / 063 | 57 | 8 | 36 | 50 | 145 | 85 | 82 | 10 | 6 | M8 x 14 (8) | 45º | 150 | 115 | 11 | 180 | 142 | 8 | 3 | - | 28.3 | 10.2 | 7.8 |
| 040 / 075 | 71.5 | 10 | 40 | 60 | 165 | 90 | 111 | 13 | 6 | M8 x 14 (8) | 45º | 165 | 130 | 14 | 200 | 170 | 8 | 4 | - | 31.3 | 12.5 | 12.0 |
| 040 / 090 | 71.5 | 11 | 45 | 70 | 182 | 100 | 111 | 13 | 6 | M10 x 18 (8) | 45º | 175 | 152 | 14 | 210 | 200 | 10 | 4 | - | 38.3 | 12.5 | 16.0 |
| 050 /110 | 84 | 14 | 50 | 85 | 225 | 115 | 131 | 15 | 6 | M10 x 18 (8) | 45º | 230 | 170 | 14 | 280 | 260 | 12 | 5 | M6 | 45.3 | 16.0 | 39.2 |
| 063 /130 | 102 | 15 | 60 | 100 | 245 | 120 | 140 | 15 | 6 | M12 x 21 (8) | 45º | 255 | 180 | 16 | 320 | 290 | 14 | 6 | M6 | 48.8 | 21.5 | 55.0 |

Para las dimensiones de acoplamiento a motor (cota PAM) consulte la tabla de la página 14.

*For dimensions concerning the motor coupling (dimension PAM) please refer to the table on page 14.*

# MVB MOTOVARIADORES DE DISCOS PLANETARIOS

# *MVB SERIES STEPLESS SPEED MOTOR-VARIATORS*

## BREVE INTRODUCCIÓN / *BRIEF INTRODUCTION*

Los motovariadores y motovariadores-reductores de la serie **MVB – MVB/C** son fabricados con especial tecnología avanzada lo que los hace especialmente adaptados para trabajos en la industria de manutención, cerámica, envase, embalaje, química, textil, alimentaria, máquina herramienta, líneas automáticas de producción, líneas de ensamblaje y en general en aquellas en las que se requiere una regulación de velocidad. Sus principales características son las siguientes:

- Campo de regulación continuo 1:5.3 realizado en toda la gama respecto a la velocidad de entrada.
- Constante de velocidad ± 0.5% a la velocidad máxima y ± 1% a la mínima.
- Sentido de giro indistinto con entrada y salida concordantes.
- Funcionamiento silencioso y uniforme, gracias al número elevado y simétrico de puntos de contacto del mecanismo de variación.
- Buen dimensionamiento para garantizar una larga duración incluso con servicio continuo y a plena carga.
- Incremento del par hasta dos veces el nominal a la velocidad mínima.
- Elevado par de arranque.
- Alto rendimiento, aproximadamente el 84% a la máxima velocidad.
- Mínima manutención.
- Facilidad de adaptación y montaje, forma coaxial, compacta y de reducidas dimensiones.
- Fabricados en aluminio de alta calidad hasta el tamaño 1.50 y en fundición el resto de modelos.

***MVB – MVB/C*** *Series of stepless speed motor-variators and motor-variators with gear reducers are developed on the basis of manufacture with advanced technologies that makes it specially adapted to work in ceramics, conveying, packing, chemical, textile, foodstuffs, machine-tools and all kinds of automatic production lines, pipelines and assembly lines which need speed-regulation. Its main features are follows:*

- *Stepless variation range from 1:5.3 all rations being reductions of the input speed.*
- *Speed uniformity ± 0.5% at maximum speed and ± 1% at minimum.*
- *L.h. or r.h. rotation with same direction at input and output.*
- *Silent and smooth running achieved thanks to numerous symetrically arranged points of contact in the variation mechanism.*
- *Generous dimension for extended life, also for continuous operation at full load.*
- *Torque increase of up to twice nominal torque at minimum speed.*
- *High start torque.*
- *High efficiency equal to approximately 84% at maximum speed.*
- *Minimum maintenance requeriments.*
- *Easy in adaptation, coaxial desing with compact casing and modest overall dimensions.*
- *Made of high-quality aluminium up to 1.50 size and in cast-iron for the rest of models.*

## CARACTERÍSTICAS DE FUNCIONAMIENTO / *STRUCTURE AND PRINCIPLE*

A la máxima velocidad.
*At the maximum speed.*

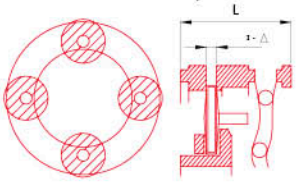


A la mínima velocidad.
*At the minimum speed.*

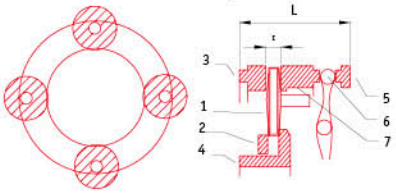


1- Satélite cónico. *Conical plant disk.*
2- Pastilla Satélites. *Friction bearings.*
3- Disco portasatélites. *Planet carrier.*
4- Pista interna. *Sun races.*
5- Discos muelle. *Belleville springs.*
6- Pista externa fija. *Fixed annulus race.*
7- Pista externa móvil. *Adjustable annulus race.*
8- Anillo porta esferas. *Ball ring.*
9- Pista externa de registro. *Cam ring.*
10- Tornillo de regulación. *Control screw.*

# MVB MOTOVARIADORES DE DISCOS PLANETARIOS

# *MVB SERIES STEPLESS SPEED MOTOR-VARIATORS*

## DESIGNACIÓN / *DESIGNATION*

### 1. Modelo Básico / *Basic Model*

**MVB 0.75 B5.00**

- Posición de montaje. *Mounting position.*
- Tamaño. *Size* **0.18 - 0.37 - 0.75 - 1.5 - 2.2 - 4.0 - 7.5.**
- MVB Motovariador de discos planetarios. *Planetary stepless motor-variator.*

### 2. Modelo con reductor / *Model with gear reducer*

**MVB 0.75 - 2 C 5 B5.04**

- Posición de montaje. *Mounting position.*
- Relación de reducción. *Reduction ratio.*
- C con reductor. *With gear reducer.*
- Número de trenes. *Number of stages.*
- Tamaño. *Size* **0.18 - 0.37 - 0.75 - 1.5 - 2.2 - 4.0 - 7.5.**
- MVB Motovariador de discos planetarios. *Planetary stepless motor-variator.*

## INSTRUCCIONES DE MONTAJE Y MANTENIMIENTO
## *OPERATION AND MAINTENANCE*

Durante la instalación y funcionamiento deben respetarse las siguientes instrucciones:

- Se debe asegurar una buena alineación entre el eje del motor y el acoplamiento del variador. El margen de error no debe ser superior a la tolerancia admitida por el acoplamiento.

- Cuando el árbol de salida se acopla a una polea, piñón o acoplamiento elástico este debe fijarse mediante el tornillo situado en el extremo del eje o bien por calentamiento. Nunca golpear el eje de salida.

- Los variadores de velocidad mecánicos no deben usarse en aplicaciones donde se prevean sobrecargas o bloqueos de la máquina.

- La variación de velocidad debe efectuarse con el variador girando. Nunca manejar el volante de regulación con el motor parado.

- Los dos tornillos de regulación situados a ambos lados de la caja de maniobras vienen reglados de fábrica. Por favor no los toquen.

- Estos equipos están previstos para trabajar a una temperatura ambiente no superior a 40°C, se debe considerar como temperatura ambiente máxima soportable 45°C. Cuando el variador comienza a trabajar (sin carga), la temperatura se eleva más de lo normal hasta 40 –50°C por encima de la temperatura ambiente. Después de las primeras 60 – 80 horas de trabajo la temperatura disminuirá progresivamente hasta la temperatura normal de trabajo, unos 20°C por encima de la temperatura ambiente y se mantendrá estable. La sobre temperatura ocurrida en la puesta en funcionamiento no daña a ninguna de las partes del variador ni afecta al tiempo de vida del mismo. (Sugerencia: trabajar sin carga durante las primeras horas).

- El aceite lubricante usado es especial para variadores de velocidad. Su referencia es ISO VG320. Por favor comprobar el nivel de lubricante antes de su puesta en funcionamiento.

# MVB MOTOVARIADORES DE DISCOS PLANETARIOS

# *MVB SERIES STEPLESS SPEED MOTOR-VARIATORS*

- Los variadores se suministran con lubricante, para trabajar durante las primeras 1.000 horas, después de este periodo el lubricante debe ser reemplazado.

- El nivel de aceite debe mantenerse a un tercio de la mirilla. Comprobar el nivel con asiduidad, está estrictamente prohibido trabajar con un bajo nivel de lubricante. El tapón ciego situado en la caja de maniobras se utiliza para evitar derrame de aceite durante el transporte, debe sustituirse por un tapón desvaporizador antes de la puesta en funcionamiento.

*To install and work with variators units the following instructions must be complied:*

*- The shaft lines should be kept concentric when the coupling is connected with a motor. The installation error should be no more than the tolerance value of the coupling.*

*- When the output shaft is installed with the coupling or belt wheel, they should be press into the screw hole on shaft end, or assembled by heating. No hammering on it.*

*- The mechanical stepless speed variator is not used in such occasion where overload or running-blockage happen to occur.*

*- Speed regulation should be effected in running. No turning the hand wheel of speed regulation when the machine stops.*

*- The banking screws of speed regulation on two ends under the operating box are well adjusted. Please don't touch them.*

*- This set is not suited to work in the environment of above 40°C, especially no more than 45°C when the temperature goes up. When the variator starts to work (without load), the temperature rises higher than normal, up to 40 – 50°C above the environment temperature. After 60 – 80 hours running, the temperature will decrease gradually. Finally, the temperature will be about 20°C higher than surrounding and keep stable. The high temperature at beginning do not damage any part of variators and do not affect its service life. (Suggestion: running without load at first.).*

*- Special liquid lubricating oil is used for the speed variator. It's ISO VG is VG320. Please check up the oil level before use.*

*- The machine is filled with lubricating oil before leaving the factory. When it stars to work up to 1000 hours for the first time, its lubricating oil should be replaced.*

*- The lubricating oil level inside the speed variator should be kept at the height of one third in the oil scale. Users should usually check up the height of oil level. It is strictly prohibited to operate it short of lubricating oil. The air crew not on the operating box is screwed up for preventing from oil leakage in moving when leaving the factory. It should be loosed when it starts to run. It is strictly forbidden to use before loosing.*

Posición estandar 1
*Standard position 1*

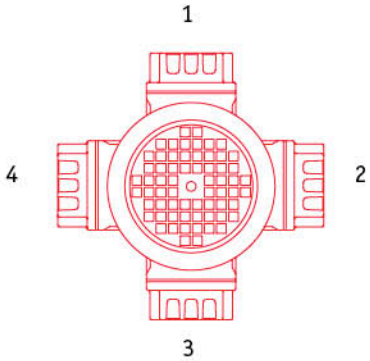


Posición de la caja de bornes
*Motor terminal box position diagram*

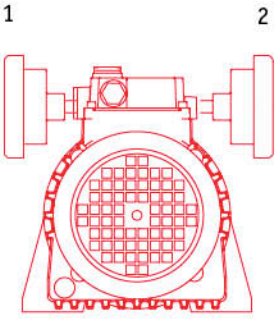


Posición del volante de mando
*Hand water position diagram*

# Prestaciones de los motovariadores tipo MVB
# *Performance of stepless speed motor-variators type MVB*

| n1=1400 r.p.m. | | | | |
|---|---|---|---|---|
| Motor KW (HP) | Tipo *Type* | i Reducción *Ratio* | Salida *Output* n2 r.p.m. | M2 Nm. |
| 0.18 (0.25) | MVB 0.18 | 1.6 - 8.2 | 880 - 170 | 1.5 - 3 |
| 0.37 (0.50) | MVB 0.37 | 1.7 - 7 | 1000 - 200 | 3 -6 |
| 0.55 (0.75) | MVB 0.75 | 1.7 - 7 | 1000 - 200 | 4 - 8 |
| 0.75 (1.00) | MVB 0.75 | 1.7 - 7 | 1000 - 200 | 6 - 12 |
| 1.10 (1.50) | MVB 1.50 | 1.7 - 7 | 1000 - 200 | 9 - 18 |
| 1.50 (2.00) | MVB 1.50 | 1.7 - 7 | 1000 - 200 | 12 - 24 |
| 2.20 (3.00) | MVB 2.20 | 1.7 - 7 | 1000 - 200 | 18 - 36 |
| 3.00 (4.00) | MVB 2.20 | 1.7 - 7 | 1000 - 200 | 24 - 48 |
| 4.00 (5.50) | MVB 4.00 | 1.7 - 7 | 1000 - 200 | 32 - 64 |
| 5.50 (7.50) | MVB 7.50 | 1.7 - 7 | 1000 - 200 | 45 - 90 |
| 7.50 (10.0) | MVB 7.50 | 1.7 - 7 | 1000 - 200 | 58 - 118 |

# Prestaciones de los motovariadores-reductores compactos tipo MVB / C
# *Performance of motor-variators with gear reducer type MVB / C*

| Motor KW (HP) | Tipo *Type* | i Reducción *Ratio* | Salida *Output* n2 r.p.m. | M2 Nm. |
|---|---|---|---|---|
| 0.18 (0.25) 4P n1=1400 | MVB 0.18-C | 2.5 | 352 - 68 | 3.5 - 7.4 |
| | | 3.3 | 266 - 51.5 | 4.7 - 10 |
| | | 5 | 176 - 34 | 7 - 15 |
| | MVB 0.18-2C | 8 | 110 - 21 | 10 - 20 |
| | | 11 | 80 - 15.5 | 14 - 28 |
| | | 13.3 | 66 - 13 | 17 - 34 |
| | | 16.6 | 53 - 10 | 21 - 42 |
| | | 20 | 44 - 8.5 | 25 - 50 |
| 0.37 (0.50) 4P n1=1400 | MVB 0.37-C | 2.5 | 400 - 80 | 7.5 - 13 |
| | | 3.3 | 300 - 60 | 9.5 - 20 |
| | | 5 | 200 - 40 | 15 - 30 |
| | MVB 0.37-2C | 8 | 125 - 25 | 20 - 40 |
| | | 11 | 90 - 18 | 28 - 56 |
| | | 13.3 | 75 - 15 | 34 - 68 |
| | | 16.6 | 60 - 12 | 42 - 84 |
| | | 20 | 50 - 10 | 53 - 106 |
| 0.75 (1.00) 4P n1=1400 | MVB 0.75-C | 2.5 | 400 - 80 | 15 - 29 |
| | | 3.3 | 300 - 60 | 19 - 38 |
| | | 5 | 200 - 40 | 30 - 60 |
| | MVB 0.75-2C | 8 | 125 - 25 | 40 - 80 |
| | | 11 | 90 - 18 | 54 - 108 |
| | | 13.3 | 75 - 15 | 68 - 136 |
| | | 16.6 | 60 - 12 | 84 - 168 |
| | | 20 | 50 - 10 | 96 - 140 |

# MUB MOTOVARIADORES DE DISCOS PLANETARIOS
# *MUB SERIES STEPLESS SPEED MOTOR-VARIATORS*

## DIMENSIONS / *OVERALL DIMENSIONS*

### Modelos básicos sin reductor / *Basic models* B3

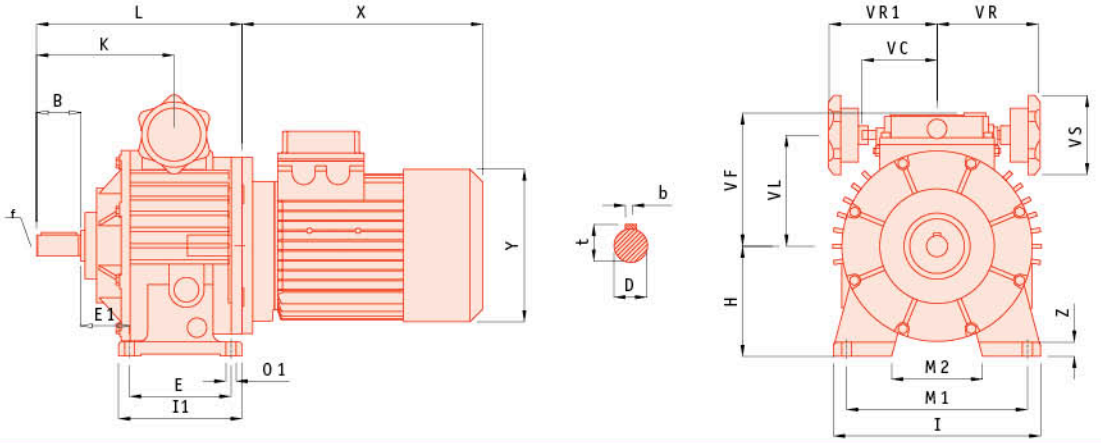


| | B | D | E | E1 | H | I | I1 | K | L | M1 | M2 | O1 | VC | VF | VL | VR | VR1 | VS | b | f | t | X | Y | Z |
|---|---|---|---|---|---|---|---|---|---|---|---|---|---|---|---|---|---|---|---|---|---|---|---|---|
| **MVB 0.18** | 23 | 11 | 105 | 17.5 | 80 | 145 | 120 | 87.5 | 135.5 | 110 | 71 | 9 | 71 | 111 | 78 | 110 | 110 | 85 | 4 | - | 12.5 | 200 | 120 | 10 |
| **MVB 0.37** | 30 | 14 | 104 | 20 | 93 | 149 | 125 | 104 | 140 | 120 | 96 | 9 | 71 | 123 | 90 | 110 | 110 | 85 | 5 | M6 | 16 | 227 | 141 | 10 |
| **MVB 0.75** | 40 | 19 | 125 | 26 | 113 | 190 | 150 | 125.5 | 179 | 160 | 135 | 11 | 79 | 140 | 107 | 120 | 120 | 110 | 6 | M6 | 21.5 | 268 | 160 | 15 |
| **MVB 1.50** | 50 | 24 | 115 | 53.5 | 123 | 241 | 150 | 165 | 238 | 190 | 143 | 13 | - | 144 | 122 | 150 | - | 110 | 8 | M8 | 27 | 290 | 195 | 18 |
| **MVB 2.20** | 60 | 30 | 230 | 25 | 150 | 300 | 270 | 191 | 268 | 245 | 190 | 14 | - | 188 | 150 | 160 | - | 110 | 8 | M8 | 33 | 320 | 215 | 25 |
| **MVB 4.00** | 60 | 30 | 230 | 25 | 150 | 300 | 270 | 191 | 168 | 245 | 190 | 14 | - | 188 | 150 | 160 | - | 110 | 8 | M8 | 33 | 340 | 240 | 25 |
| **MVB 7.50** | 70 | 35 | 250 | 33 | 200 | 365 | 290 | 201 | 319 | 315 | 245 | 18 | - | - | 192 | 194 | - | 110 | 10 | M10 | 38 | 435 | 275 | 30 |

### Modelos básicos sin reductor / *Basic models* B5

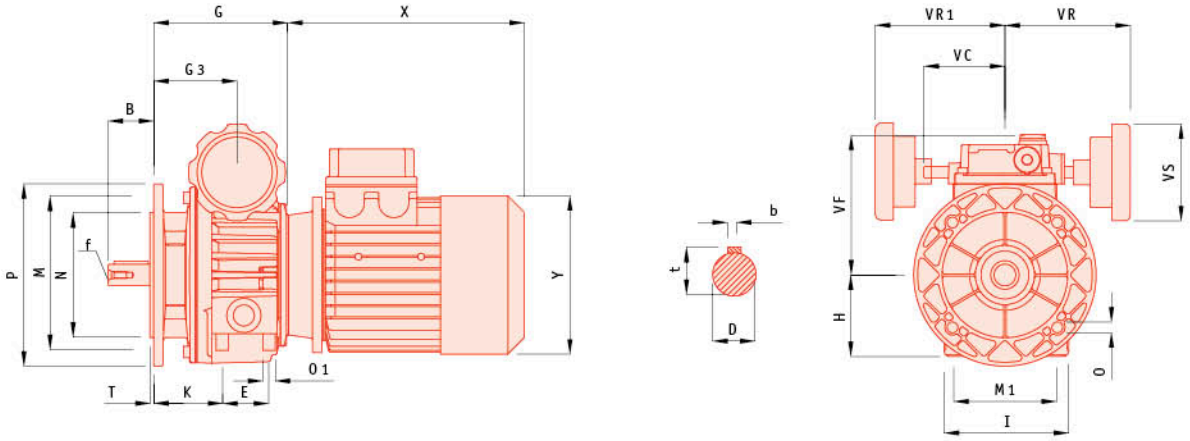


| | B | D | E | G | G3 | H | I | M | M1 | N | P | T | K | VC | VF | VL | VR | VR1 | VS | b | f | t | X | Y |
|---|---|---|---|---|---|---|---|---|---|---|---|---|---|---|---|---|---|---|---|---|---|---|---|---|
| **MVB 0.18** | 23 | 11 | 50 | 112.5 | 64.5 | 70 | 72 | 115 | 60 | 95 | 140 | 3.5 | 46 | 71 | 111 | 78 | 110 | 110 | 85 | 4 | - | 12.5 | 200 | 120 |
| **MVB 0.37** | 30 | 14 | 40 | 110 | 74 | 80 | 90 | 130 | 77 | 110 | 160 | 3.5 | 53 | 71 | 123 | 90 | 110 | 110 | 85 | 5 | M6 | 16 | 227 | 141 |
| **MVB 0.75** | 40 | 19 | 58 | 139 | 85.5 | 100 | 98 | 165 | 84 | 130 | 200 | 3.5 | 60 | 79 | 140 | 107 | 120 | 120 | 110 | 6 | M6 | 21.5 | 268 | 160 |
| **MVB 1.50** | 50 | 24 | - | 188 | 115 | 126 | 241 | 165 | - | 130 | 200 | 3.5 | - | - | 144 | 122 | 150 | - | 110 | 8 | M8 | 27 | 290 | 195 |
| **MVB 2.20** | 60 | 28 | - | 208 | 131 | 150 | 270 | 265 | - | 230 | 300 | 4 | - | - | 188 | 150 | 160 | - | 110 | 8 | M8 | 31 | 320 | 215 |
| **MVB 4.00** | 60 | 28 | - | 208 | 131 | 150 | 270 | 265 | - | 230 | 300 | 4 | - | - | 188 | 150 | 160 | - | 110 | 8 | M8 | 31 | 340 | 240 |
| **MVB 7.50** | 70 | 38 | - | 244 | 131 | 200 | - | 300 | - | 250 | 350 | 5 | - | - | - | 192 | 194 | - | 110 | 10 | M10 | 41 | 435 | 275 |

# MVB MOTOVARIADORES DE DISCOS PLANETARIOS
# *MVB SERIES STEPLESS SPEED MOTOR-VARIATORS*

## DIMENSIONS / *OVERALL DIMENSIONS*

**Modelos compactos con un tren de engranajes**
***Model basic and one-stage gear unit***

**B3 PATAS / *FOOT***

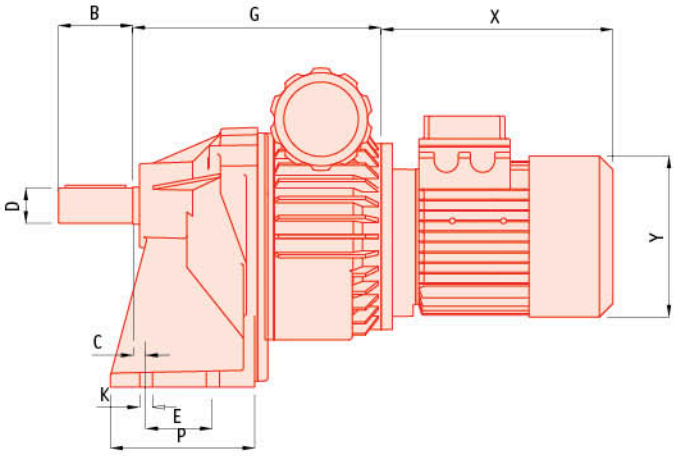


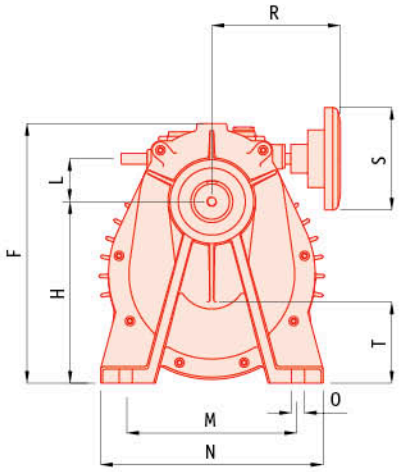


| | B | C | D | E | F | G | H | Y | L | M | N | O | P | R | S | T | X | K |
|---|---|---|---|---|---|---|---|---|---|---|---|---|---|---|---|---|---|---|
| **MVB 0.18 - C** | 40 | 18 | 19 | 45 | 162 | 189 | 108 | 120 | 33 | 115 | 130 | 9 | 80 | 110 | 85 | 66 | 200 | 16 |
| **MVB 0.37 – C** | 50 | 6 | 24 | 70 | 187 | 190 | 130 | 141 | 39 | 150 | 190 | 10 | 110 | 110 | 85 | 79 | 227 | 15 |
| **MVB 0.75 - C** | 60 | 7 | 28 | 70 | 228 | 225 | 160 | 160 | 46 | 165 | 210 | 12 | 130 | 130 | 110 | 99 | 268 | 25 |

**Modelos compactos con un tren de engranajes**
***Model basic and one-stage gear unit***

**B5 BRIDA / *FLANGE***

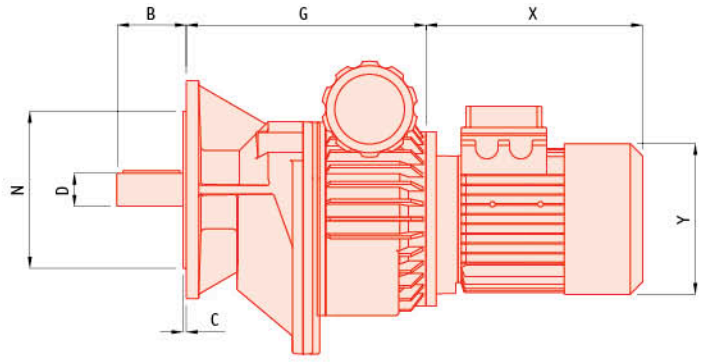


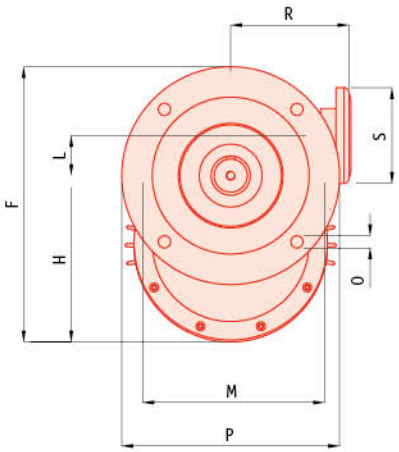


| | B | C | D | F | G | H | Y | L | M | N | O | P | R | S | X |
|---|---|---|---|---|---|---|---|---|---|---|---|---|---|---|---|
| **MVB 0.18 – C** | 40 | 3 | 19 | 176 | 191 | 105 | 120 | 33 | 115 | 95 | 9 | 140 | 110 | 85 | 200 |
| **MVB 0.37 – C** | 50 | 4 | 24 | 208 | 192 | 128 | 141 | 39 | 130 | 110 | 10.5 | 160 | 110 | 85 | 227 |
| **MVB 0.75 - C** | 60 | 4 | 28 | 255 | 227 | 155 | 160 | 46 | 165 | 130 | 12.5 | 200 | 130 | 110 | 268 |

# MVB MOTOVARIADORES DE DISCOS PLANETARIOS
# *MVB SERIES STEPLESS SPEED MOTOR-VARIATORS*

## DIMENSIONS / *OVERALL DIMENSIONS*

**Modelos compactos con dos trenes de engranajes**
***Model basic and two-stage gear unit***

**B3 PATAS / *FOOT***

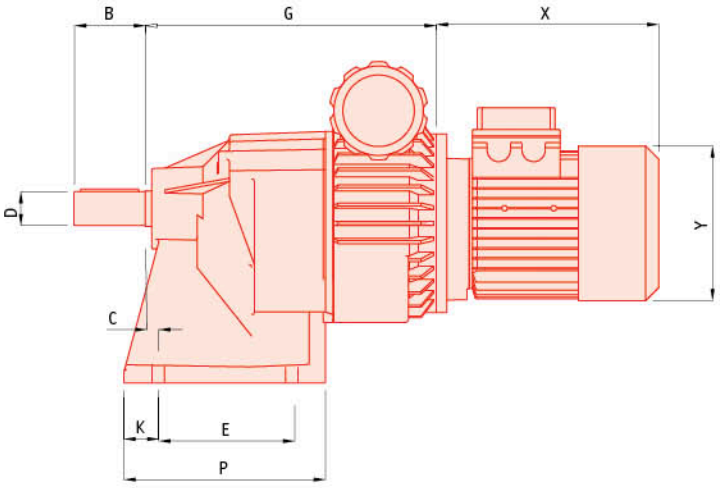


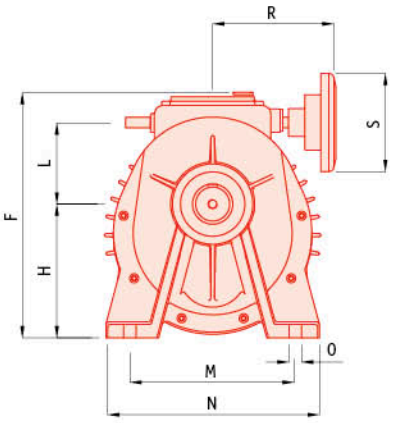


| | B | C | D | E | F | G | H | Y | L | M | N | O | P | R | S | X | K |
|---|---|---|---|---|---|---|---|---|---|---|---|---|---|---|---|---|---|
| **MVB 0.18 – 2C** | 40 | 27 | 19 | 70 | 201 | 229 | 105 | 120 | 78 | 105 | 130 | 9 | 120 | 110 | 85 | 200 | 21 |
| **MVB 0.37 – 2C** | 55 | 25 | 28 | 85 | 216 | 238 | 110 | 141 | 90 | 150 | 190 | 10 | 140 | 110 | 85 | 227 | 19 |
| **MVB 0.75 – 2C** | 65 | 34 | 32 | 90 | 261 | 278 | 154 | 160 | 107 | 185 | 230 | 12 | 150 | 130 | 110 | 268 | 21 |

**Modelos compactos con dos trenes de engranajes**
***Model basic and two-stage gear unit***

**B5 BRIDA / *FLANGE***

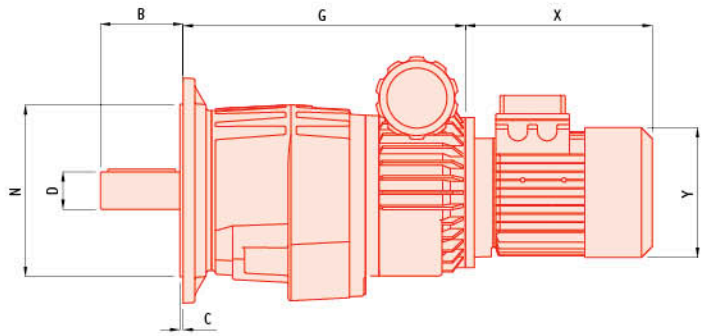


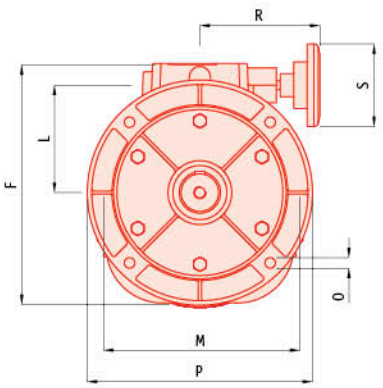


| | B | C | D | F | G | Y | L | M | N | O | P | R | S | X |
|---|---|---|---|---|---|---|---|---|---|---|---|---|---|---|
| **MVB 0.18 – 2C** | 40 | 3 | 19 | 198 | 231 | 120 | 78 | 115 | 95 | 9 | 140 | 110 | 85 | 200 |
| **MVB 0.37 – 2C** | 65 | 4 | 28 | 223 | 240 | 141 | 90 | 130 | 110 | 10.5 | 160 | 110 | 85 | 227 |
| **MVB 0.75 - 2C** | 65 | 4 | 32 | 262 | 280 | 160 | 107 | 165 | 130 | 12.5 | 200 | 130 | 110 | 268 |

# MVB+MSF MOTOVARIADORES-REDUCTORES DE VIS SIN FIN
# *MVB+MSF MOTOVARIATOR AND WORM GEARBOXES*

## DESIGNACIÓN / *DESIGNATION*

**MVB 0.75 - MSF 063 FA - 40 DV ES Ø25 B3.20**

- Posición de montaje. *Mounting position.*
- ø Arbol de salida hueco. *ø Output shaft bore.*
- **ES** = Eje de salida simple. *Single output shaft.*
  **ED** = Eje de salida doble. *Double output shaft.*
  **BR** = Brazo de reacción. *Torque arm.*
- **DV** = Vis prolongado. *Double input shaft.*
- Relación de reducción. *Reduction ratio.*
- **FA** **FB** **FC** **FD** **FE** Versiones brida de salida. *Output flange versions.*
- Tamaño de reductor. *Size of worm gearbox.*
- **MSF** Reductor de vis sin fin. *Worm gearbox.*
- Tamaño de motovariador. *Size of motor-variator.*
- **MVB** Matovariador de discos planetarios. *Planetary stepless motor-variator.*

## MVB + MSF LISTADO DE COMBINACIONES POSIBLES
## *MVB + MSF POSSIBLE COMBINATIONS*

| **MSF REDUCTORES DE VIS SIN FIN / *MSF WORM GEARBOXES*** | | | | | | | |
|---|---|---|---|---|---|---|---|
| **MSF** | **40** | **50** | **63** | **75** | **90** | **110** | **130** |
| **MVB** | **i Reducciones / *Ratios*** | | | | | | |
| **0.18** | 7.5 - 100 | 40 – 100 | | | | | |
| **0.37** | | 7.5 – 80 | 40 – 100 | 50 – 100 | | | |
| **0.75** | | 7.5 – 30 | 7.5 – 60 | 20 – 100 | 40 – 100 | 80 – 100 | |
| **1.5** | | | 7.5 – 30 | 7.5 – 40 | 7.5 – 60 | 25 – 100 | 80 – 100 |
| **2.2** | | | | 7.5 - 15 | 7.5 – 30 | 7.5 – 60 | 25 – 100 |
| **4.0** | | | | | 7.5 - 30 | 7.5 – 60 | 25 – 100 |

# Prestaciones de los motovariadores - reductores de vis sin fin
# *Performance of motor-variators and worm gearboxes*

| Motor Kw | n2 rpm | i | M2 Nm | Tipo *Type* |
|---|---|---|---|---|
| 0.18 4P n1=1400 | 117~23 | 7.5 | 9~18 | MVB 018 + MSF 040 |
| | 88~17 | 10 | 12~23 | |
| | 59~11 | 15 | 17~32 | |
| | 44~8.5 | 20 | 22~40 | |
| | 35~6.8 | 25 | 27~47 | |
| | 29~5.7 | 30 | 30~51 | |
| | 22~4.3 | 40 | 37~62 | |
| | 18~3.4 | 50 | 22~40 | |
| | 22~4.3 | 40 | 38~63 | MVB 018 + MSF 050 |
| | 18~3.4 | 50 | 44~73 | |
| | 15~2.8 | 60 | 50~80 | |
| | 11~2.1 | 80 | 59~82 | |
| | 8.8~1.7 | 100 | 66~79 | |
| 0.37 4P n1=1400 | 133~27 | 7.5 | 19~36 | MVB 037 + MSF 050 |
| | 100~20 | 10 | 25~47 | |
| | 67~13 | 15 | 36~65 | |
| | 50~10 | 20 | 46~82 | |
| | 40~8 | 25 | 55~97 | |
| | 33~6.7 | 30 | 61~107 | |
| | 25~5 | 40 | 76~124 | |
| | 20~4 | 50 | 89~120 | |
| | 25~5 | 40 | 79~134 | MVB 037 + MSF 063 |
| | 20~4 | 50 | 92~155 | |
| | 17~3.3 | 60 | 104~173 | |
| | 12.5~2.5 | 80 | 125~173 | |
| | 10~2 | 100 | 139~173 | |
| 0.55 4P n1=1400 | 133~27 | 7.5 | 26~49 | MVB 075 + MSF 063 |
| | 100~20 | 10 | 34~63 | |
| | 67~13 | 15 | 48~88 | |
| | 50~10 | 20 | 62~112 | |
| | 40~8 | 25 | 75~133 | |
| | 33~6.7 | 30 | 81~146 | |
| | 25~5 | 40 | 105~179 | |
| | 20~4 | 50 | 123~207 | |
| | 20~4 | 50 | 129~216 | MVB 075 + MSF 075 |
| | 17~3.3 | 60 | 146~242 | |
| | 12.5~2.5 | 80 | 176~250 | |
| | 12.5~2.5 | 80 | 189~309 | MVB 075 MSF 090 |
| | 10~2 | 100 | 218~350 | |
| 0.75 4P n1=1400 | 133~27 | 7.5 | 39~73 | MVB 075 + MSF 063 |
| | 100~20 | 10 | 51~94 | |
| | 67~13 | 15 | 72~132 | |
| | 50~10 | 20 | 92~168 | |
| | 40~8 | 25 | 112~199 | |
| | 33~6.7 | 30 | 126~219 | |
| | 25~5 | 40 | 156~232 | |
| | 20~4 | 50 | 185~310 | |
| | 20~4 | 50 | 192~320 | MVB 075 MSF 075 |
| | 17~3.3 | 60 | 219~300 | |
| | 17~3.3 | 60 | 230~389 | MVB 075 + MSF 090 |
| | 12.5~2.5 | 80 | 265~428 | |
| | 10~2 | 100 | 303~410 | |
| | 12.5~2.5 | 80 | 302~503 | MVB 075 MSF 110 |
| | 10~2 | 100 | 348~575 | |

| Motor Kw | n2 rpm | i | M2 Nm | Tipo *Type* |
|---|---|---|---|---|
| 1.10 4P n1=1400 | 133~27 | 7.5 | 59~111 | MVB 1.5 + MSF 075 |
| | 100~20 | 10 | 77~144 | |
| | 67~13 | 15 | 110~203 | |
| | 50~10 | 20 | 142~258 | |
| | 40~8 | 25 | 172~308 | |
| | 33~6.7 | 30 | 195~340 | |
| | 25~5 | 40 | 245~360 | |
| | 100~20 | 10 | 78~146 | MVB 1.5 + MSF 090 |
| | 67~13 | 15 | 113~208 | |
| | 50~10 | 20 | 146~266 | |
| | 40~8 | 25 | 177~320 | |
| | 33~6.7 | 30 | 202~356 | |
| | 25~5 | 40 | 256~442 | |
| | 20~4 | 50 | 304~517 | |
| | 20~4 | 50 | 320~550 | MVB 1.5 + MSF 110 |
| | 17~3.3 | 60 | 368~625 | |
| | 12.5~2.5 | 80 | 455~754 | |
| | 10~2 | 100 | 522~710 | |
| | 17~3.3 | 60 | 373~623 | MVB 1.5 + MSF 130 |
| | 12.5~2.5 | 80 | 460~749 | |
| | 10~2 | 100 | 531~868 | |
| 1.50 4P n1=1400 | 133~27 | 7.5 | 78~148 | MVB 1.5 + MSF 075 |
| | 100~20 | 10 | 102~192 | |
| | 67~13 | 15 | 147~270 | |
| | 50~10 | 20 | 190~344 | |
| | 40~8 | 25 | 229~330 | |
| | 33~6.7 | 30 | 260~390 | |
| | 25~5 | 40 | 327~360 | |
| | 133~27 | 7.5 | 77~150 | MVB 1.5 + MSF 090 |
| | 100~20 | 10 | 104~195 | |
| | 67~13 | 15 | 150~277 | |
| | 50~10 | 20 | 194~355 | |
| | 40~8 | 25 | 236~427 | |
| | 33~6.7 | 30 | 270~474 | |
| | 25~5 | 40 | 341~589 | |
| | 20~4 | 50 | 406~560 | |
| | 20~4 | 50 | 426~733 | MVB 1.5 MSF 110 |
| | 17~3.3 | 60 | 490~833 | |
| | 17~3.3 | 60 | 498~831 | MVB 1.5 + MSF 130 |
| | 12.5~2.5 | 80 | 614~999 | |
| | 10~2 | 100 | 696~1100 | |
| 2.2 4P n1=1400 | 133~27 | 7.5 | 120~226 | MVB 2.2 + MSF 110 |
| | 100~20 | 10 | 157~294 | |
| | 67~13 | 15 | 228~418 | |
| | 50~10 | 20 | 298~549 | |
| | 40~8 | 25 | 346~664 | |
| | 33~6.7 | 30 | 413~717 | |
| | 25~5 | 40 | 533~931 | |
| | 25~5 | 40 | 542~932 | MVB 2.2 + MSF 130 |
| | 20~4 | 50 | 648~1097 | |
| | 17~3.3 | 60 | 746~1246 | |
| | 12.5~2.5 | 80 | 921~1499 | |
| | 10~2 | 100 | 1040~1100 | |

# Prestaciones de los motovariadores - reductores de vis sin fin
# *Performance of motor-variators and worm gearboxes*

| Motor Kw | n2 rpm | i | M2 Nm | Tipo *Type* |
|---|---|---|---|---|
| 3.00 4P n1=1400 | 133~27 | 7.5 | 160~302 | MVB 2.2 + MSF 110 |
| | 100~20 | 10 | 210~392 | |
| | 67~13 | 15 | 304~558 | |
| | 50~10 | 20 | 398~732 | |
| | 40~8 | 25 | 485~885 | |
| | 33~6.7 | 30 | 547~956 | |
| | 25~5 | 40 | 711~1030 | |
| | 133~27 | 7.5 | 160~301 | MVB 2.2 + MSF 130 |
| | 100~20 | 10 | 211~395 | |
| | 67~13 | 15 | 307~563 | |
| | 50~10 | 20 | 402~733 | |
| | 40~8 | 25 | 490~885 | |
| | 33~6.7 | 30 | 562~973 | |
| | 25~5 | 40 | 720~1242 | |
| | 20~4 | 50 | 864~1463 | |

| Motor Kw | n2 rpm | i | M2 Nm | Tipo *Type* |
|---|---|---|---|---|
| 4.00 | 133~27 | 7.5 | 213~402 | MVB 4.0 |
| | 100~20 | 10 | 279~523 | |
| | 67~13 | 15 | 405~744 | |
| | 50~10 | 20 | 530~975 | |
| | 40~8 | 25 | 647~1020 | |
| | 133~27 | 7.5 | 214~401 | MVB 4.0 |
| | 100~20 | 10 | 281~527 | |
| | 67~13 | 15 | 410~751 | |
| | 50~10 | 20 | 536~978 | |
| | 40~8 | 25 | 653~1180 | |
| | 33~6.7 | 30 | 749~1298 | |
| | 25~5 | 40 | 960~1650 | |

## DIMENSIONS / *OVERALL DIMENSIONS*

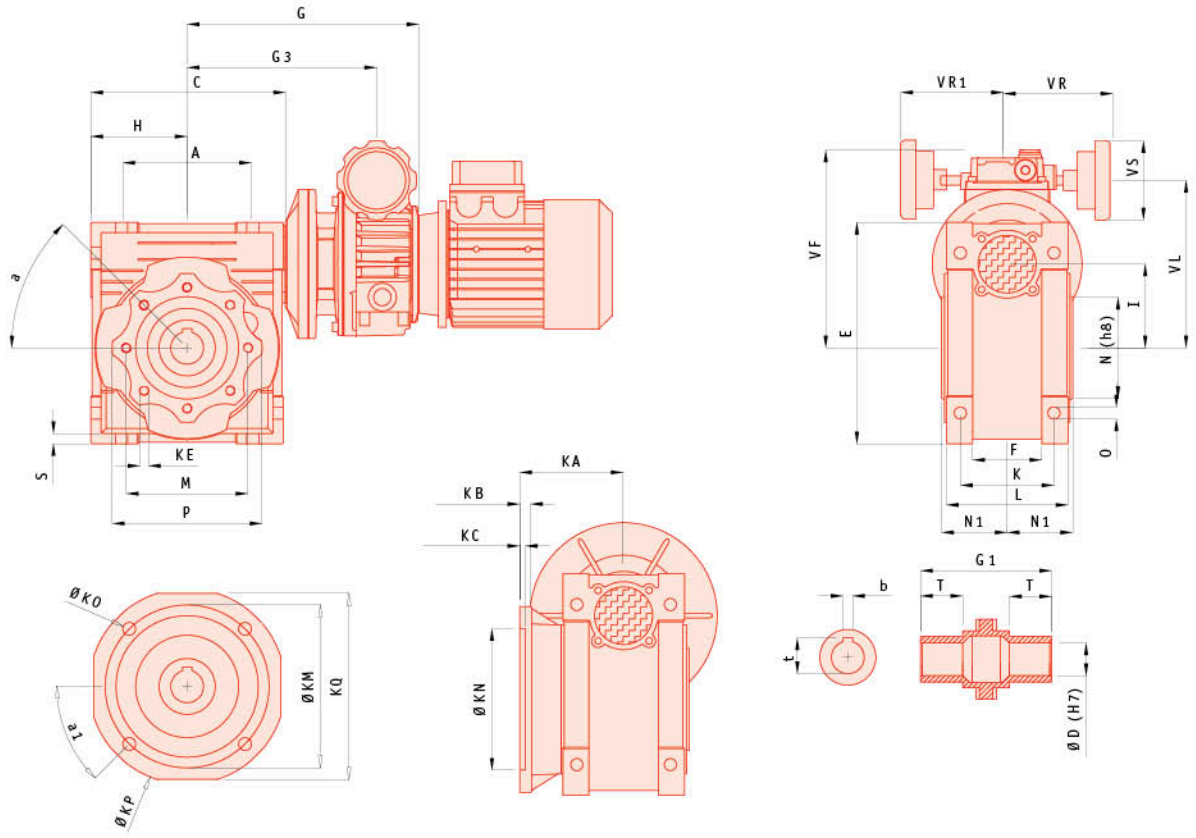

# MVB+MSF MOTOVARIADORES-REDUCTORES DE VIS SIN FIN
# *MVB+MSF MOTOVARIATOR AND WORM GEARBOXES*

## DIMENSIONS / *OVERALL DIMENSIONS*

| Tamaño *Size* | | a | a1 | A | K | KC | KE | KM | KN | KO | M | N | N1 | O | Q | S | V | b | D | t | T |
|---|---|---|---|---|---|---|---|---|---|---|---|---|---|---|---|---|---|---|---|---|---|
| MBV 018 | MSF 040 | 45º | 45º | 70 | 60 | 4 | M6x8 | 87 | 60 | 9 (4) | 75 | 60 | 36.5 | 6.5 | 55 | 6.5 | 35 | 6 | 18 | 20.8 | 26 |
| MBV 018<br>MBV 037 | MSF 050 | 45º | 45º | 80 | 70 | 5 | M8x10 | 90 | 110 | 11 (4) | 85 | 70 | 43.5 | 8.5 | 64 | 7 | 40 | 8 | 25 | 28.3 | 30 |
| MBV 037<br>MBV 075 | MSF 063 | 45º | 45º | 100 | 85 | 6 | M8X14 | 150 | 115 | 11 (4) | 95 | 80 | 53 | 8.5 | 80 | 8 | 50 | 8 | 25 | 28.3 | 36 |
| MBV 037<br>MBV 075<br>MBV 1.5 | MSF 075 | 45º | 45º | 120 | 90 | 6 | M8X14 | 165 | 130 | 14 (4) | 115 | 95 | 57 | 11 | 93 | 10 | 60 | 8 | 28 | 31.3 | 40 |
| MBV 075<br>MBV 1.5 | MSF 090 | 45º | 45º | 140 | 100 | 6 | M10X18 | 175 | 152 | 14 (4) | 130 | 110 | 67 | 13 | 102 | 11 | 70 | 10 | 35 | 38.3 | 45 |
| MBV 1.5<br>MBV 2.2<br>MBV 4.0 | MSF 110 | 45º | 45º | 170 | 115 | 6 | M10X18 | 230 | 170 | 14 (8) | 165 | 130 | 74 | 14 | 125 | 14 | 85 | 12 | 42 | 45.3 | 50 |
| MBV 1.5<br>MBV 2.2<br>MBV 4.0 | MSF 130 | 45º | 22.5º | 200 | 120 | 6 | M12X21 | 255 | 180 | 16 (8) | 215 | 180 | 81 | 16 | 140 | 15 | 100 | 14 | 45 | 48.8 | 60 |

| Tamaño *Size* | | C | E | F | G | G1 | G3 | H | I | KA | KB | KP | KQ | L | P | R | VF | VL | VS | VR | VR1 |
|---|---|---|---|---|---|---|---|---|---|---|---|---|---|---|---|---|---|---|---|---|---|
| MBV 018 | MSF 040 | 100 | 121.5 | 43 | 183 | 78 | 135 | 50 | 40 | 67 | 7 | 110 | 95 | 71 | 87 | 71.5 | 151 | 118 | 85 | 110 | 110 |
| MBV 018 | MSF 050 | 120 | 144 | 49 | 193 | 92 | 145 | 60 | 50 | 90 | 9 | 125 | 110 | 85 | 100 | 84 | 161 | 128 | 85 | 110 | 110 |
| MBV 037 | | | | | 190 | | 154 | | | | | | | | | | 173 | 140 | 85 | 110 | 110 |
| MBV 037 | MSF 063 | 144 | 174 | 67 | 205 | 112 | 169 | 72 | 63 | 82 | 10 | 180 | 142 | 103 | 110 | 102 | 186 | 153 | 85 | 110 | 110 |
| MBV 075 | | | | | 234 | | 181 | | | | | | | | | | 203 | 170 | 110 | 120 | 120 |
| MBV 037 | MSF 075 | 172 | 205 | 72 | 223 | 120 | 187 | 86 | 75 | 111 | 13 | 200 | 170 | 112 | 140 | 119 | 198 | 165 | 85 | 110 | 110 |
| MBV 037 | | | | | 252 | | 198 | | | | | | | | | | 215 | 182 | 110 | 120 | 120 |
| MBV 1.5 | | | | | 301 | | 228 | | | | | | | | | | 219 | 197 | 110 | 150 | - |
| MBV 075 | MSF 090 | 208 | 238 | 74 | 269 | 140 | 215 | 103 | 90 | 111 | 13 | 210 | 200 | 130 | 160 | 135 | 230 | 197 | 110 | 120 | 120 |
| MBV 1.5 | | | | | 318 | | 245 | | | | | | | | | | 234 | 212 | 110 | 150 | - |
| MBV 1.5 | MSF 110 | 252.5 | 295 | - | 348 | 155 | 275 | 128 | 110 | 131 | 15 | 280 | 260 | 144 | 200 | 168 | 254 | 232 | 110 | 150 | - |
| MBV 2.2 | | | | | 368 | | 291 | | | | | | | | | | 298 | 260 | 110 | 160 | - |
| MBV 4.0 | | | | | 368 | | 291 | | | | | | | | | | 298 | 260 | 110 | 160 | - |
| MBV 1.5 | MSF 130 | 292.5 | 335 | - | 368 | 170 | 295 | 148 | 130 | 140 | 15 | 320 | 290 | 155 | 250 | 188 | 274 | 252 | 110 | 150 | - |
| MBV 2.2 | | | | | 388 | | 311 | | | | | | | | | | 318 | 280 | 110 | 160 | - |
| MBV 4.0 | | | | | 388 | | 311 | | | | | | | | | | 318 | 280 | 110 | 160 | - |

Posibilidad de bridas y ejes huecos especiales. Ver dimensiones en la página 11.
*Possibility of special flanges and bore shafts. See dimensions on page 11.*

# POSICIONES DE MONTAJE Y LUBRICACIÓN
# *MOUNTING POSITIONS AND LUBRICATION*

## POSICIÓN DE MONTAJE / *MOUNTING POSITIONS*

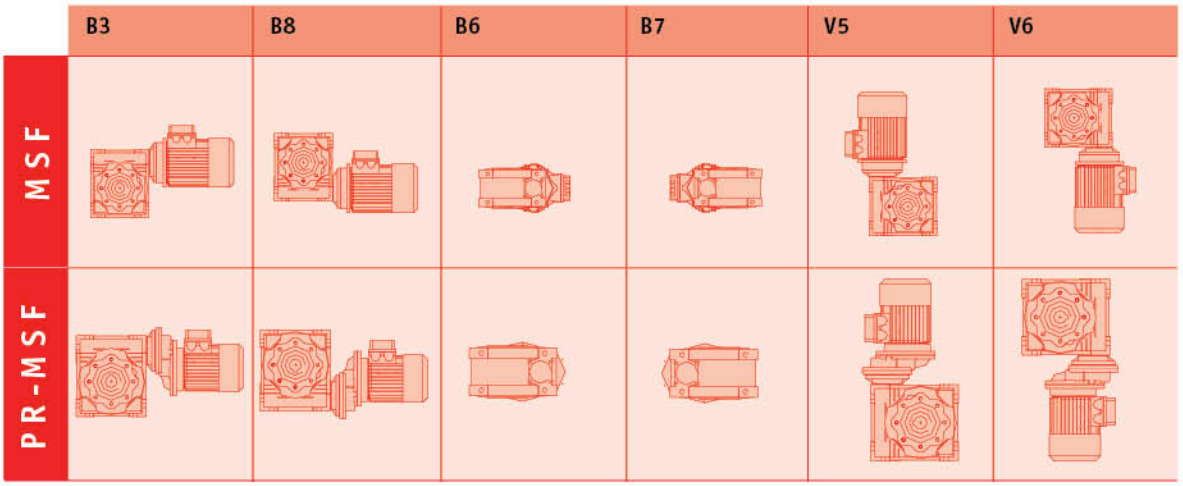


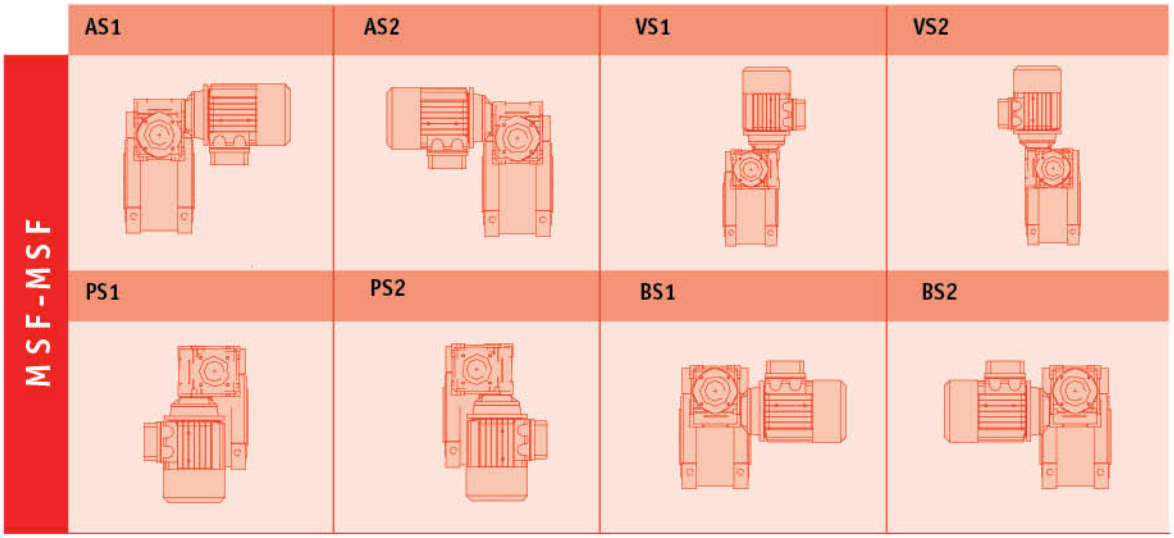


**BRIDA DE SALIDA/** ***OUTPUT FLANGE***

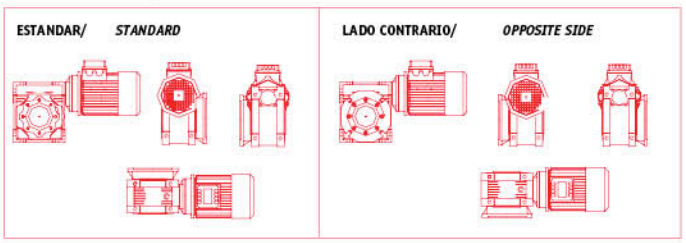


**POS. CAJA DE BORNES/** ***POS. TERMINAL BOX***

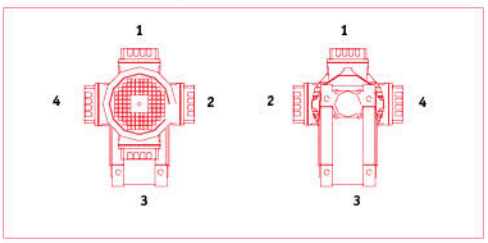

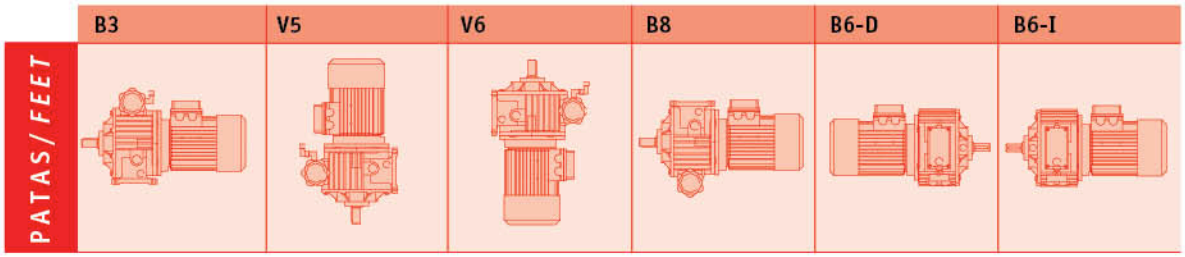


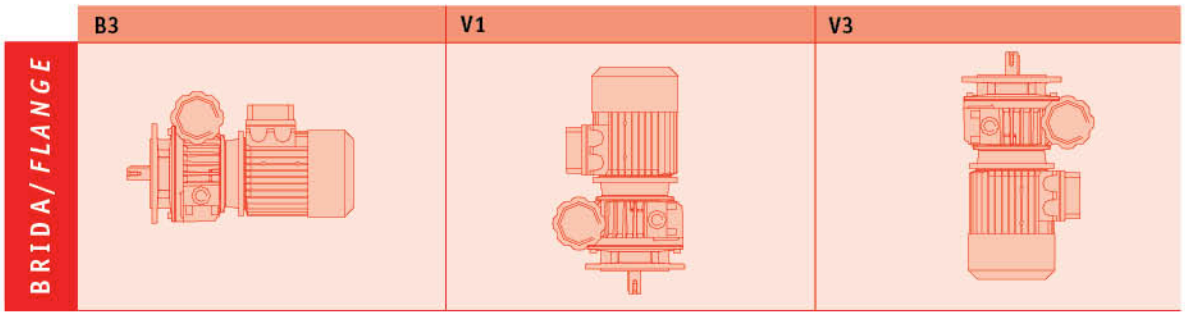


# LUBRICACIÓN / *LUBRICATION*

## Tabla de lubricantes / *Choice of lubricants*

| | MVB Variadores *MVB Speed Variators* | MSF Reductores de Vis sin Fin *MSF Worm-gear speed reducers* | | | | PR Prereducciones *Helical Units* |
|---|---|---|---|---|---|---|
| | | MSF 025~090 | MSF 110~130 | | | |
| **Lubricante** *Lubricant* | Sintético *Synthetic* | Sintético *Synthetic* | Sintético *Synthetic* | Mineral | | Sintético *Synthetic* |
| **Temp °C** | -25°C ~ +40°C | -25°C ~ +50°C | -25°C ~ +40°C | -5°C ~ +40°C | -15°C ~ +25°C | -25°C ~ +50°C |
| **ISO** | VG 32 | VG 320 | VG 320 | VG 460 | VG 220 | VG 320 |
| | | | | | | |
| **IP** | A.T.F. DEXRON FLUID | TELIUM VSF | MELLANA OIL 320 | MELLANA OIL 460 | MELLANA OIL 220 | TELIUM VSF |
| **SHELL** | A.T.F. DEXRON | TIVELA OIL SC320 | OMALA OIL 320 | OMALA OIL 460 | OMALA OIL 220 | TIVELA OIL SC320 |
| **AGIP** | A.T.F. DEXRON | BLASIA S320 | BLASIA 320 | BLASIA 460 | BLASIA 220 | BLASIA S320 |
| **ESSO** | A.T.F. DEXRON | S 220 | S 220 | SPARTAN EP 460 | SPARTAN EP 220 | S 220 |
| **MOBIL** | A.T.F. 220 | GLYGOYLE 30 | MOBIL GEAR 320 | MOBIL GEAR 634 | MOBIL GEAR 630 | GLYGOYLE 30 |
| **CASTROL** | TQ DEXRON II | ALPHASYN PG 320 | ALPHASYN PG 320 | ALPHA MAX 460 | ALPHA MAX 220 | ALPHASYN PG 320 |
| **BP** | AUTRAN DX | ENERGOL SG-XP 320 | ENERGOL SG-XP 320 | ENERGOL SG-XP 460 | ENERGOL SG-XP 220 | ENERGOL SG-XP 320 |

## Cantidad de lubricante / *Oil volume*

| MSF | | | | | | | | | |
|---|---|---|---|---|---|---|---|---|---|
| **Tipo/Size** | 025 | 030 | 040 | 050 | 063 | 075 | 090 | 110 | 130 |
| **L** | 0.02 | 0.04 | 0.08 | 0.15 | 0.3 | 0.55 | 1 | 3 | 4.5 |

| MVB | | | | | | | |
|---|---|---|---|---|---|---|---|
| **Tipo/Size** | 0.18 | 0.37 | 0.75 | 1.50 | 2.20 | 4.00 | 7.50 |
| **L** | 0.02 | 0.04 | 0.08 | 0.15 | 0.3 | 0.55 | 1 |

# MOTORES ELÉCTRICOS
# *ELECTRIC MOTORS*

## DIMENSIONS / *OVERALL DIMENSIONS*

**B5**

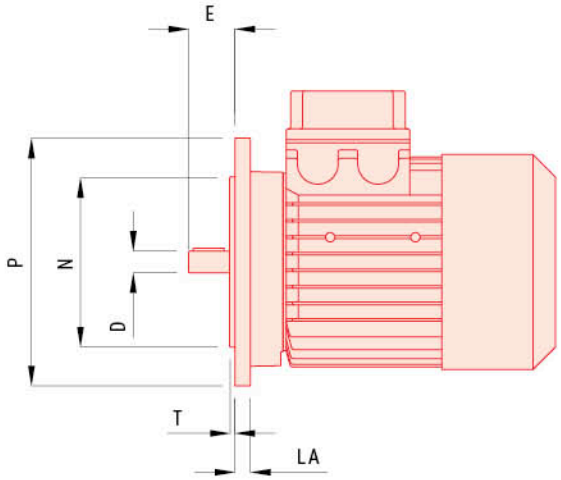


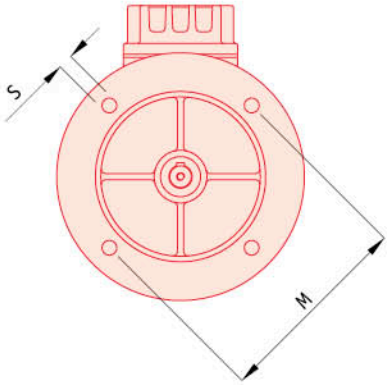


| TAMAÑO *SIZE* | N | M | P | D | E | S | T | LA |
|---|---|---|---|---|---|---|---|---|
| **56** | 80 | 100 | 120 | 9 | 20 | 7 | 3 | 9 |
| **63** | 95 | 115 | 140 | 11 | 23 | 9 | 3 | 10.5 |
| **71** | 110 | 130 | 160 | 14 | 30 | 9 | 3.5 | 10 |
| **80** | 130 | 165 | 200 | 19 | 40 | 12 | 3.5 | 11 |
| **90 S** | 130 | 165 | 200 | 24 | 50 | 12 | 3.5 | 10.5 |
| **90 L** | 130 | 165 | 200 | 24 | 50 | 12 | 3.5 | 10.5 |
| **100** | 180 | 215 | 250 | 28 | 60 | 14 | 4 | 15.5 |
| **112** | 180 | 215 | 250 | 28 | 60 | 14 | 4 | 15.5 |
| **132 S** | 230 | 265 | 300 | 38 | 80 | 14 | 4 | 20 |
| **132 M** | 230 | 265 | 300 | 38 | 80 | 14 | 4 | 20 |
| **160 M** | 250 | 300 | 350 | 42 | 110 | 18 | 5 | 14 |
| **160 L** | 250 | 300 | 350 | 42 | 110 | 18 | 5 | 14 |
| **180 M** | 250 | 300 | 350 | 48 | 110 | 18.5 | 5 | 20 |
| **180 L** | 250 | 300 | 350 | 48 | 110 | 18.5 | 5 | 20 |
| **200 L** | 300 | 350 | 400 | 55 | 110 | 18.5 | 5 | 18 |

Para obtener las dimensiones y pesos de los motores eléctricos, solicitar a COSGRA el catálogo correspondiente.
*Concerning the dimensions & weight for electric motors, please ask the suitable catalogue to COSGRA.*

# MOTORES ELÉCTRICOS
# *ELECTRIC MOTORS*

## DIMENSIONS / *OVERALL DIMENSIONS*

**B14**

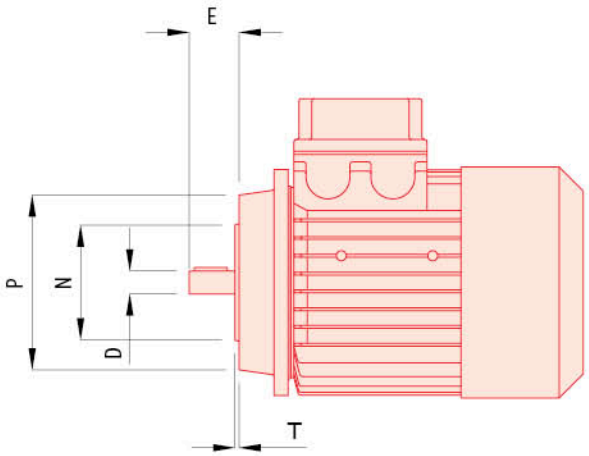


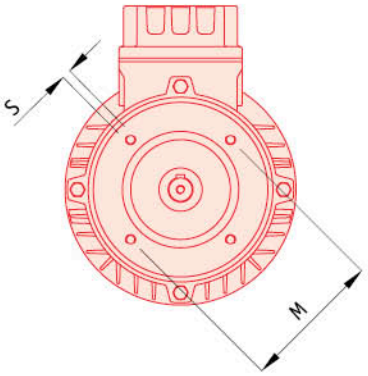


| TAMAÑO *SIZE* | N | M | P | D | E | S | T |
|---|---|---|---|---|---|---|---|
| **56** | 50 | 65 | 80 | 9 | 20 | M5 | 2 |
| **63** | 60 | 75 | 90 | 11 | 23 | M5 | 2 |
| **71** | 70 | 85 | 105 | 14 | 30 | M6 | 2.5 |
| **80** | 80 | 100 | 120 | 19 | 40 | M6 | 3 |
| **90 S** | 95 | 115 | 140 | 24 | 50 | M8 | 3 |
| **90 L** | 95 | 115 | 140 | 24 | 50 | M8 | 3 |
| **100** | 110 | 130 | 160 | 28 | 60 | M8 | 3.5 |
| **112** | 110 | 130 | 160 | 28 | 60 | M8 | 3.5 |
| **132 S** | 130 | 165 | 200 | 38 | 80 | M10 | 3.5 |
| **132 M** | 130 | 165 | 200 | 38 | 80 | M10 | 3.5 |

Para obtener las dimensiones y pesos de los motores eléctricos, solicitar a COSGRA el catálogo correspondiente.
*Concerning the dimensions & weight for electric motors, please ask the suitable catalogue to COSGRA.*

# GARANTÍAS, DEVOLUCIONES Y RECLAMACIONES
# *WARRANTIES, RETURNS AND COMPLAINTS*

## GARANTÍAS / *WARRANTIES*

• **COSGRA** garantiza los motores que suministra en lo referente a defectos de materiales o de fabricación por un periodo de un año contando a partir de la fecha de envío, tomando como fecha válida la indicada en el albarán de entrega. Salvo acuerdo específico en la oferta o en la aceptación del pedido.

• Las reparaciones se entienden en las instalaciones de **COSGRA** corriendo a cargo del Comprador los desmontajes, embalajes, transportes, aduanas, tasas, etc., originados por el envío del material a las instalaciones de **COSGRA** y su posterior entrega al Comprador.

• **COSGRA** podrá acordar con el Comprador la realización de las reparaciones o sustituciones de las piezas defectuosas en las instalaciones del Comprador. **COSGRA** no asumirá las reparaciones efectuadas por terceros.

• La garantía consiste en la reparación o sustitución de las piezas defectuosas, bien por defectos del material o de fabricación. Si es de aplicación se sustituye el motor defectuoso completo por uno de nuevo y los portes de llegada y reexpedición.

• La reparación o sustitución de una pieza defectuosa no varía la fecha de inicio del periodo de garantía del material suministrado. No obstante, la pieza reemplazada o reparada tendrá un año de garantía a partir de su reparación o sustitución.

• Quedan excluidos de la garantía los daños o efectos debidos al desgaste por el uso normal del material, así como los daños y defectos producidos por una puesta en marcha incorrecta, una conservación o mantenimiento inadecuados, almacenamiento o manejo erróneo, modificaciones introducidas sin el consentimiento, por escrito, de **COSGRA** y en general por causas no imputables a **COSGRA**.

• A todo lo expuesto en los apartados anteriores, **COSGRA** no será responsable de los defectos en los motores y materiales suministrados por un plazo superior a un año a partir de la fecha de envío.

• **COSGRA** no será responsable en ningún caso de los daños indirectos y/o consecuenciales que pudiesen sobrevenir como consecuencia del suministro; pérdida de producción, averías o coste de paradas, etc.

• La responsabilidad total contractual de **COSGRA** derivada del suministro queda limitada al valor del suministro que ha originado la reclamación. Dicha limitación no será aplicable a la responsabilidad por daños directos a personas y propiedades.

• Es de exclusiva responsabilidad y cuidado del Comprador o usuario final el buen funcionamiento, o conservación, o mantenimiento del material suministrado.

• ***COSGRA*** *guarantees the supplied motors against faulty materials or manufacture for a period of one year from the date of shipment, taking as the valid date that indicated on the deliver note. Except with specific agreement made at the time of the offer or the acceptance of the order.*

• *All repairs will be carried out in the COSGRA workshops. Costs relating to the disassembly, packing, transport, customs, taxes etc. incurred in the shipment of the product to the COSGRA workshop and its subsequent delivery are not covered by the warranty.*

• ***COSGRA*** *can agree with the purchaser to carry out repairs or replacement of the defective parts in the purchaser's workshops.* ***COSGRA*** *will not accept responsibility for repairs carried out by third parties.*

• *The warranty consists of the repair or replacement of defective parts, caused by defective materials or manufacturing faults. If applicable, we will replace the complete defective motor for a new one and assume the shipment costs of the return and re-shipping.*

• *The repair or replacement of a defective part does not change the initial of date warranty period of the supplied goods. However, the replaced or repaired parts will be guaranteed for one year from the date of repair or replacement.*

• *Excluded from the warranty application: damages caused by normal wear and tear, damage or defects caused by an incorrect installation, inadequate care or maintenance, incorrect storage or handling, modifications made without written authorization from COSGRA, and all general causes non-attributable to* ***COSGRA****.*

• *For reasons explained above,* ***COSGRA*** *is not responsible for defects in motors or goods supplied after a period exceeding one year from the delivery date.*

• ***COSGRA*** *will not be responsible, in any case, for indirect and/or consequential damage that might occur as a result of the goods supplied; loss of production, breakdowns or cost of stops, etc.*

• *The total contractual liability of* ***COSGRA*** *for the goods supplied is limited to the value of the goods that have given rise to the claim. Such limitation shall not apply to liability for direct damage to people and property.*

• *It is exclusive responsibility and care of the buyer or end-user for the proper functioning, or care, or maintenance of the goods supplied.*



## DEVOLUCIONES Y RECLAMACIONES / *RETURNS AND COMPLAINTS*

• **COSGRA** no admitirá devoluciones de materiales sin previo acuerdo al respecto con el Comprador. Se establece un plazo de 15 días desde que el suministro ha sido recibido por el Comprador, para que este notifique a **COSGRA** su intención de realizar una devolución y la justificación de la misma, y acuerde con **COSGRA** , en su caso, el procedimiento de la devolución. En cualquier caso las reclamaciones del Comprador a **COSGRA** deberán realizarse por escrito y de forma fehaciente.

• Las devoluciones o envíos de material a las instalaciones de **COSGRA**, ya sea para su abono, sustitución o reparación deberán hacerse siempre a portes pagados.

• **COSGRA** no admitirá devoluciones de materiales que hayan sido utilizados, montados en otros equipos o instalaciones, o sujetos a desmontajes ajenos a **COSGRA**.

• **COSGRA** no admitirá devoluciones de productos diseñados o fabricados especialmente para el pedido.

• ***COSGRA*** *will not accept goods for refund without previous agreement with the Purchaser. We stipulate a 15 day period after the goods are received by the Purchaser, for notifying* ***COSGRA*** *of the intention to return the goods, to provide the related justification, and agree with* ***COSGRA*** *the refund procedure. In all cases the Purchaser's complaint to* ***COSGRA*** *must be in writing and in a certifiable manner.*

• *The costs of returns or goods shipments to* ***COSGRA*** *facilities, either for refund, replacement or repair, must always be met by the Purchaser.*

• ***COSGRA*** *will not accept the return of goods that have been used, mounted in other equipment or installations, or that have been disassembled by parties other than* ***COSGRA****.*

• ***COSGRA*** *will not accept the return of goods, which have been designed or manufactured specially to order.*

Ed. JALMAC 08/13 1.0. Reservado el derecho a modificación sin previo aviso./ Subject to change without notice.

cosgra sa

**MOTORES ELÉCTRICOS, CA:** Monofásicos / Trifásicos / Autofrenantes / Antiexplosivos / Antideflagrantes / Velocidad variable
**REDUCTORES:** Vis sin fin / Con prereducción / Doble vis sin fin / Variadores / Discos planetarios
**MOTOTAMBORES Y RODILLOS MOTORIZADOS**
**CIERRES MECÁNICOS PARA EJES ROTATIVOS**

**ELECTRIC MOTORS, CA:** Single Phase / Three Phase / Braking / Anti-explosion / Flameproof / Variable speed
**GEARED MOTORS:** Worm series / Pre-stage helical units / Combined worm / Variators/ Series stepless speed
**MOTORISED DRUMS AND MOTORISED PULLEYS**
**MECHANICAL SEALS FOR ROTARY SHAFTS**

Ctra. de Banyoles a Figueres, Km 9 _ Telfs. 902 405 205 - +34 972 597 807 _ Fax +34 972 597 233
**www.cosgra.com** _ comercial@cosgra.com _ 17832 **CRESPIÀ** (Girona) _ SPAIN
Apartado 100 _ 17820 **BANYOLES** (Girona)
(E) Esponellà Latitud: 42°10'42.6"N Longitud: 2°48'04.9"E Altitud: 120 m.

GRUP ci-ME

TROTEN CEMER VEM E.M.G. WA MOTORS CEMER RAEL UVE JALMAC CEMER

www.studio8.com